HEAVY DUTY UNIVERSAL JOINT DRIVESHAFTS

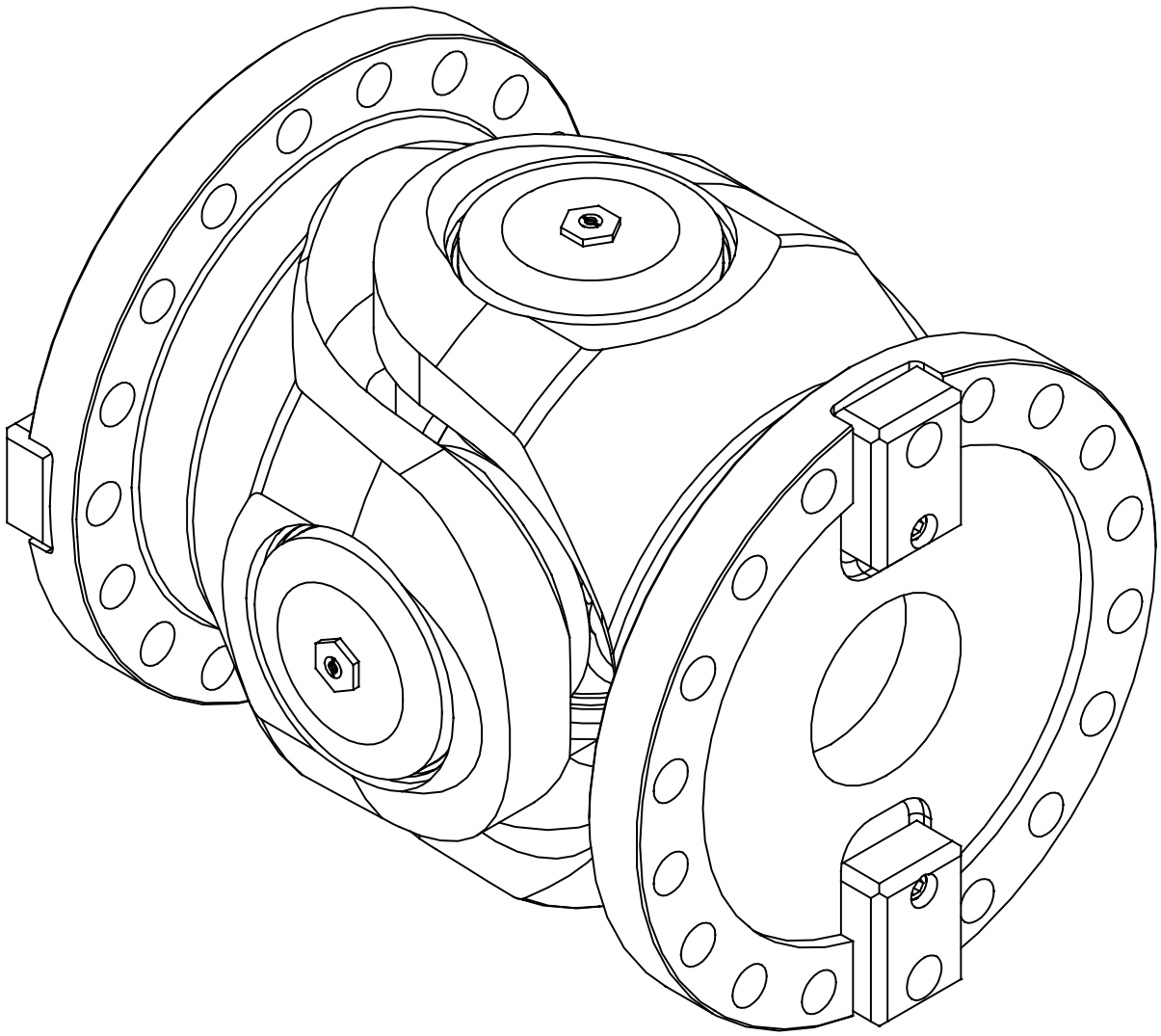

All Power-Transmission Inc.

Why Universal Joint Driveshafts?

Universal joint driveshafts provide a cost effective means to transmit power from the power source to the driven machine. Installation time is reduced as the need for critical alignment tolerances required by other types of couplings is eliminated. The telescopic feature eliminates the need for movement of machinery for installation or maintenance removal. The telescopic feature also allows motion during operation or no-load conditions.

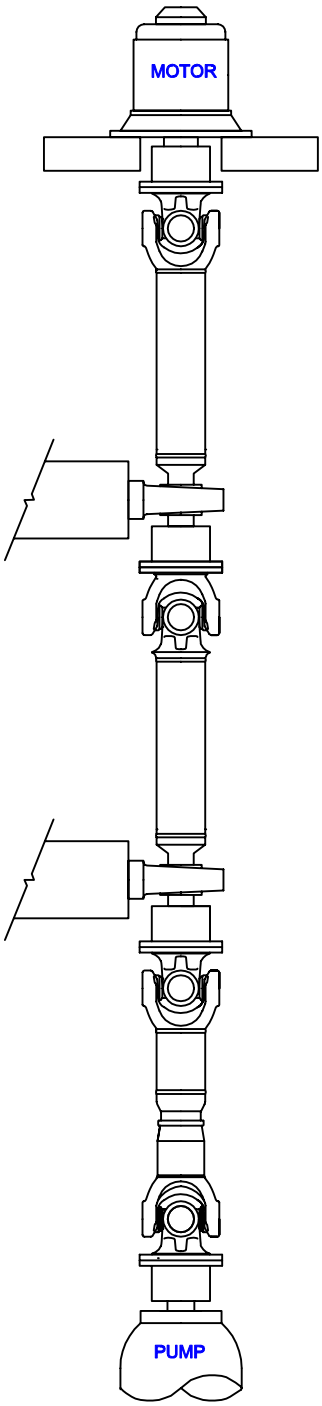

Typical Pumping Application

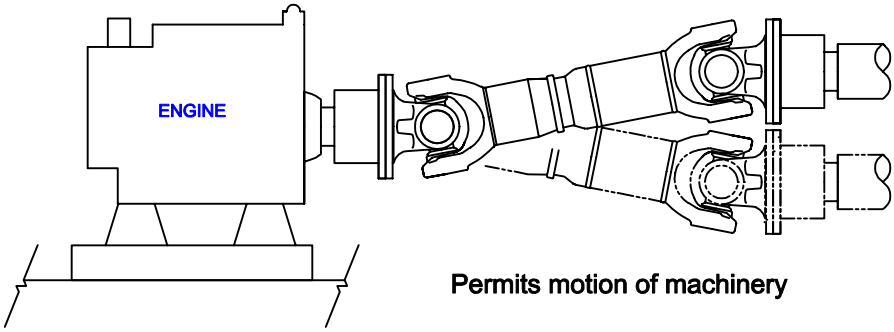

Permits motion of machinery

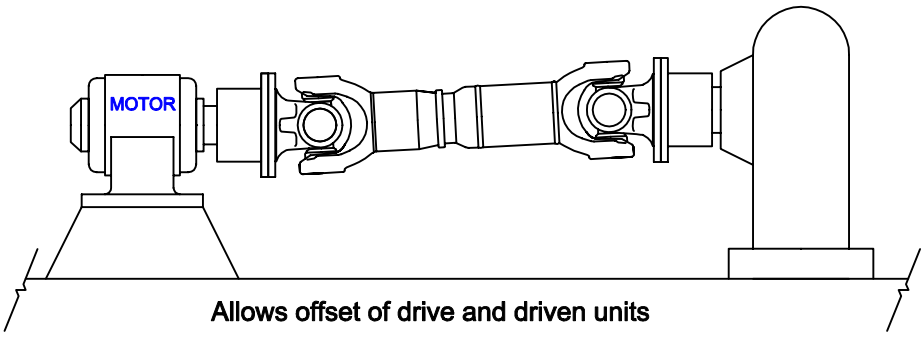

Allows offset of drive and driven units

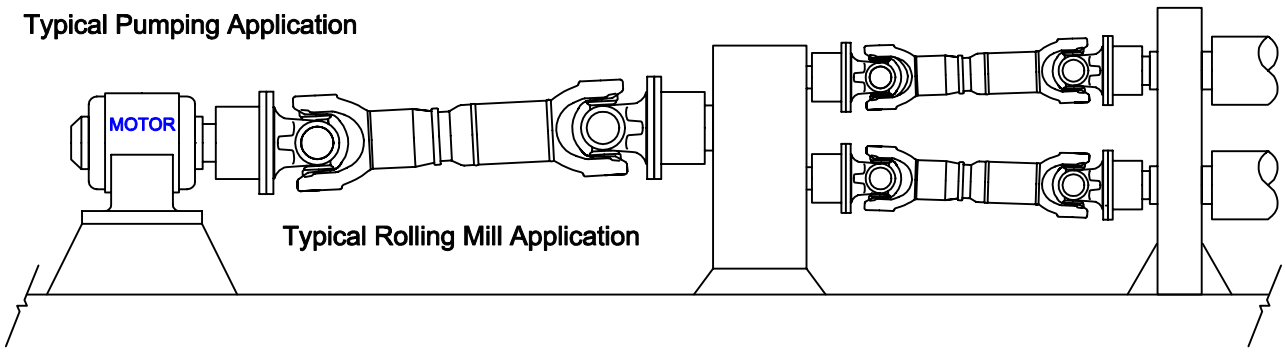

Typical Rolling Mill Application

Universal Joint Sizing Procedure

Four types of torque ratings are given for most joint sizes.

Continuous torque (Tc) is the bearing life rating of the universal joint. This torque is based on the B-10 life of the universal joint bearings. The life torque values listed are based on 5000 hours B-10 bearing life at 3° misalignment and 100 RPM. B-10 life is defined as the minimum life expectancy for a 90% probability of survival. Typically the average actual operating life of the bearings is 5X the calculated B-10 life.

Endurance Torque (Te) is the normal rating for fully reversed torque based on material strength.

Short Duration Torque (Ts) is the joints capability to withstand momentary loading from start stop service.

Peak torque (Tp) is the maximum allowable torque based on the yield strength capacity of the joint.

The torque ratings are based on material strength. When approaching these limits the capacity of the desired flange connection should be verified. When the service torque **(Tk)** approaches the endurance torque **(Te)** or when the maximum torque approaches the peak torque capacity **(Tp)** of the universal joint, face keys or face pads are recommended. The number of pads and bolts are customized on a per application basis. Hirth radial teeth are also available on a per application basis.

Universal Joint Selection

I. Calculate application torque **(Ta)** and service torque **(Tk).**

$$\mathbf{Ta} = \frac{\mathrm{HP}(63025)}{\mathbf{N}}$$

N = Speed (RPM)

Tk = Service Torque = **Ta** x Service Factor (Table 3)

Tk must be less than **Te** for reversing torque applications.

II. Check to see if life is sufficient.

$$\mathbf{Lh} = \frac{1.5\mathrm{x}10^6}{\mathbf{A}\mathrm{x}\mathbf{N}}\left[\frac{\mathbf{Tc}}{\mathbf{Ta}}\right]^{\frac{10}{3}}$$

Where:
Lh = B-10 life in hours
A = operating angle in degrees
N = speed (RPM)
Tc = continuous torque
Ta = application torque

III. Duty Cycle: In application where the torque, speed and operating angle vary predictably during a typical load cycle or operational sequence, a duty cycle can be determined. First the load cycle must be analyzed and divided into groups of fixed combinations of torque, speed and operating angle. These groups represent percentages of the total operating time of the load cycle. Life expectancy can then be calculated using Miner's Theory, which takes into account the cumulative effect resulting from operating at varying conditions.

The total life expectancy can be calculated using the following equation:

$$\text{Total Life Expectancy} = \frac{N_1}{L_1} + \frac{N_2}{L_2} + \frac{N_3}{L_3} + \ldots + \frac{N_m}{L_m}$$

Where:
N1 = fraction of total, time at operating condition 1
L1 = life expectancy at operating condition 1 (hours)
m = total number of operating conditions

IV. Determine Peak Torque conditions.
Tp must exceed the maximum operating torque.

V. Other considerations:
There are many other items that can determine the size of a universal joint.
These include:
1. Diameter and length limitations.
2. Bore size.
3. Equipment restrictions on forces and moments.
4. Speed limits
(see Tables 1 and 2)
a. due to mass acceleration as a function of misalignment
b. critical speed of center shaft

Telescopic splines are available on ST and SC designs. Telescopic sections are required for length compensation between two end connections. They will compensate for length changes due to machine articulation, temperature changes, frame flexure …etc.
For increased durability induction hardened, nitrided or coated splines are available on request

Axial Forces
While universal joints do not produce axial forces they will transmit a portion of the axial forces applied to them. The amount of axial force that they can transmitted via the spline section is a function of the spline coefficient of friction, operating torque and the spline pitch diameter per the following formula.

$$F = \frac{2T\mu}{PD}$$

F = Axial Force
T = Operating Torque
μ = Coefficient of Friction
(.11 to .15 for lubricated steel on steel, contact All Power for other conditions)
PD= Spline Pitch Diameter

Maximum RPM
In applications where long shafts and or high speed are combined, the speed is restricted by the lateral critical speed of the center section. This speed is a function of the center tube diameter, wall thickness and the effective length. The maximum operating speed must be less than the lateral critical speed shown in Table 4. The maximum operating speed must not exceed 75% of critical speed. For most applications involving universal joints, operation at 1/2 critical speed will also create unacceptable vibration. For these applications the operating speed should be above or below 50% of the maximum indicated. For shafts greater than shown or where the the allowable speeds are exceeded special oversize tubing may be used. Please contact All Power for details.

Balancing
Driveshafts are generally provided straightened and balanced. For some low speed application they are provided straighted only. For high speed applications and some sensitive applications, special balance requirements may be required. Please contact All Power.

Table 3. Application Service Factors

LOAD	DRIVEN EQUIPMENT	CONTINUOUS PRIME MOVERS MOTORS TURBINES	REVERSING PRIME MOVERS DC MOTORS RECIPRICATING ENGINES
CONSTANT TORQUE	Generators Centrifugal Pumps Conveyors	1.00	1.50
LIGHT TORQUE	Continuous Casters Light Fans Machine Tools Woodworking Equipment Paper Mill Equipment Bar & Rod Mills	1.25	2.00
MEDIUM TORQUE	Compressors PumpsFans Cold Rolling Mills Presses Agricultural Equipment	1.50	2.25
HEAVY SHOCK	Traction & Locomotive Drives Mixers, Cranes Drives Mining Equipment Hot Rolling Mill Drives Runout Tables	2.00	3.00
VERY HEAVY SHOCK	Generators Centrifugal Pumps Conveyors	3.00	5.00

Table 4. Critical Speed

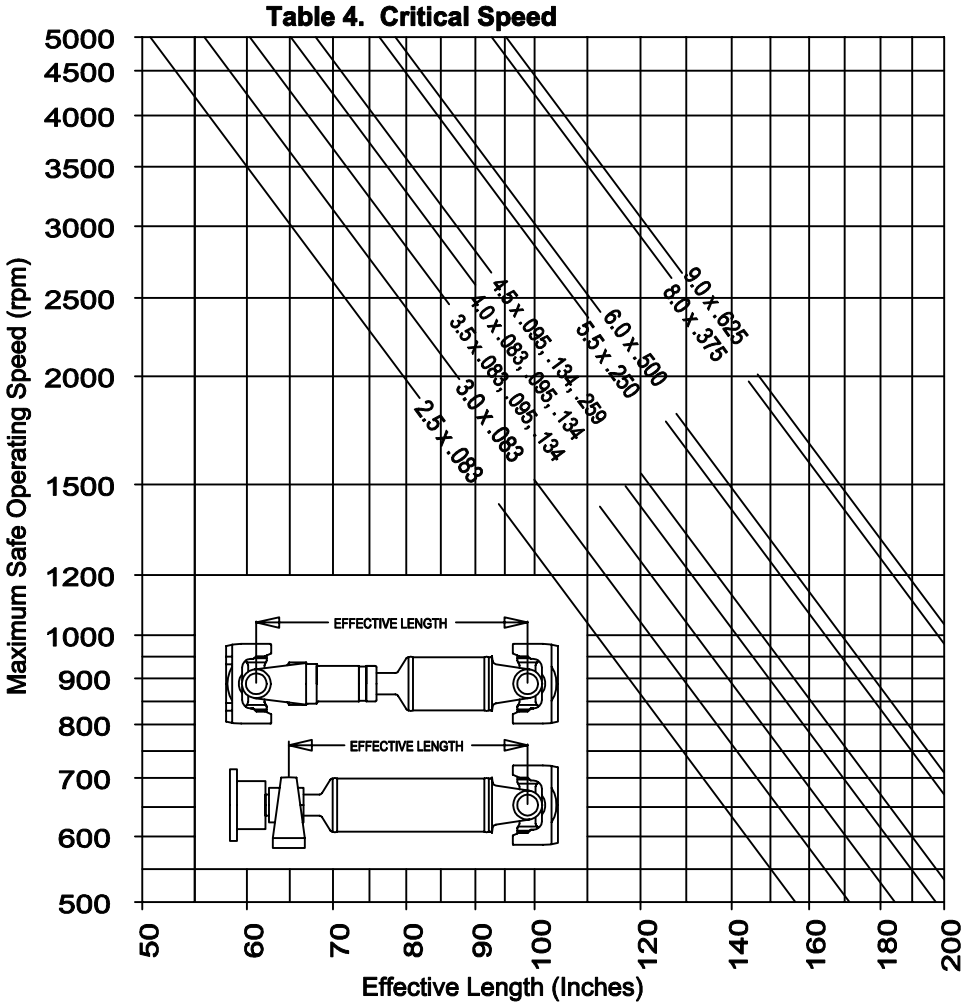

Engineering Data
SAE Series Sizes 31-55

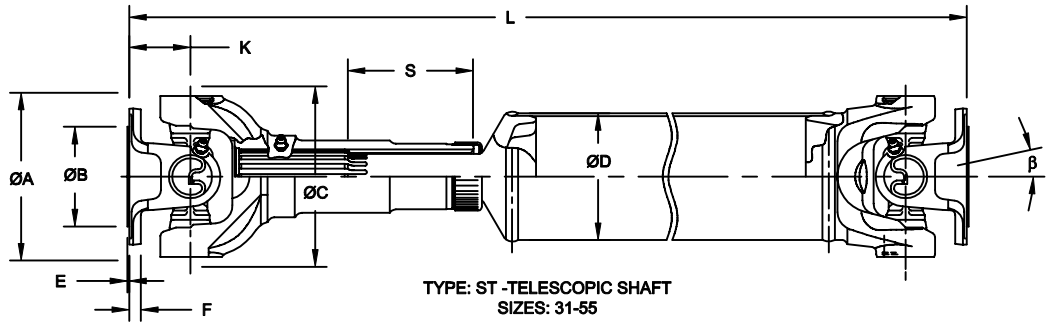

TYPE: ST -TELESCOPIC SHAFT
SIZES: 31-55

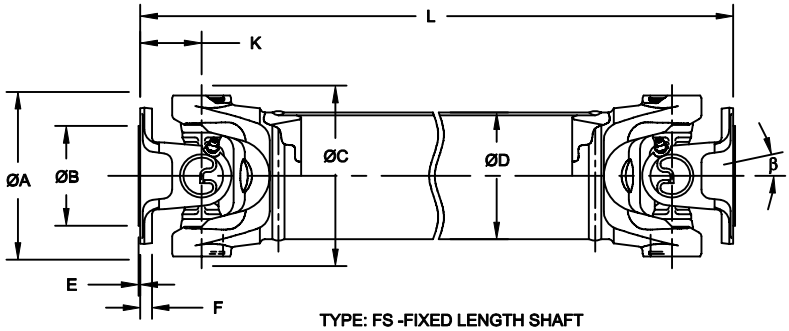

TYPE: FS -FIXED LENGTH SHAFT
SIZES: 31-55

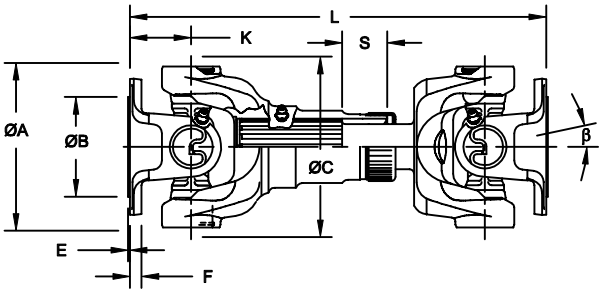

TYPE: SC -SHORT COUPLED SHAFT
SIZES: 31-55

Series	31		37		41		48		55	
Torque Ratings										
	in-lb	**Nm**	**in-lb**	**Nm**	**in-lb**	**Nm**	**in-lb**	**Nm**	**in-lb**	**Nm**
Tc	4,920	556	7,280	823	8,760	990	11,400	1,288	14,200	1,605
Ts	9,600	1,085	14,880	1,681	18,000	2,034	24,000	2,712	28,800	3,254
Tp	19,200	2,169	27,120	3,064	32,400	3,661	39,960	4,515	52,800	5,966
Dimensional Data (inches and millimeters except where noted)										
β	20°		20°		20°		22°		22°	
β (SC)	15°		8°		8°		8°		5°	
	in	**mm**	**in**	**mm**	**in**	**mm**	**in**	**mm**	**in**	**mm**
A	3.88	98.6	4.62	117.3	4.62	117.3	5.88	149.4	5.88	149.4
B	2.38	60.5	3.62	91.9	2.88	73.2	2.50	63.5	3.75	95.25
C	3.75	95.3	4.25	108.0	4.69	119.1	4.81	122.2	5.63	143.0
D[1)]	2.50	63.5	3.00	76.2	305.00	7747.0	3.50	88.9	3.50	88.9
E	0.06	1.5	0.06	1.5	0.06	1.5	0.06	1.5	0.06	1.5
F	0.38	9.7	0.38	9.7	0.38	9.7	0.38	9.7	0.38	9.7
K	1.38	35.1	1.56	39.6	1.69	42.9	2.00	50.8	2.00	50.8
K (SC)	1.38	35.1	1.56	39.6	1.69	42.9	1.50	38.1	2.00	50.8
DBC	3.12	79.2	3.75	95.3	3.75	95.3	4.75	120.7	4.75	120.7
Bolt Qty.	4	4	4	4	4	4	4	4	5	5
H	0.38	9.7	0.44	11.2	0.44	11.2	0.50	12.7	0.50	12.7
Length L[2)] **/ Length Compensation S**										
	in	**mm**	**in**	**mm**	**in**	**mm**	**in**	**mm**	**in**	**mm**
ST L	13.00	330.2	14.88	378.0	14.13	358.9	15.25	387.4	15.38	390.7
S	3.06	77.7	3.62	91.9	3.47	88.1	2.50	63.5	2.50	63.5
FS L	7.67	194.8	8.59	218.2	9.03	229.4	10.03	254.8	10.80	274.3
SC L	8.88	225.6	9.50	241.3	9.50	241.3	8.50	215.9	9.75	247.7
S	1.25	31.8	0.75	19.1	0.75	19.1	1.00	25.4	1.00	25.4

1) Special tube diameters available upon request
2) L is minimum for ST and FS design
Longer/shorter length compensation available upon request.
Popular flange yoke configurations shown, special designs available upon request

Engineering Data
SAE Series Sizes 61-91

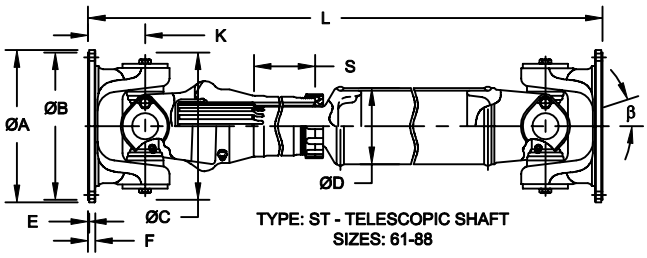

TYPE: ST - TELESCOPIC SHAFT
SIZES: 61-88

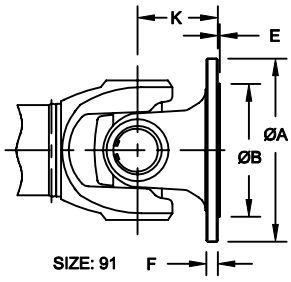

SIZE: 91

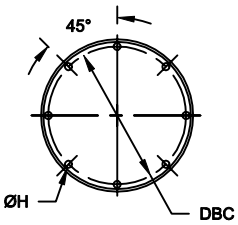

SIZES: 61-71

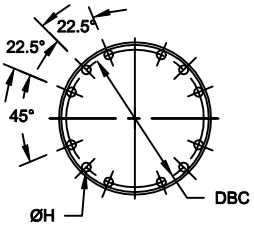

SIZE: 81

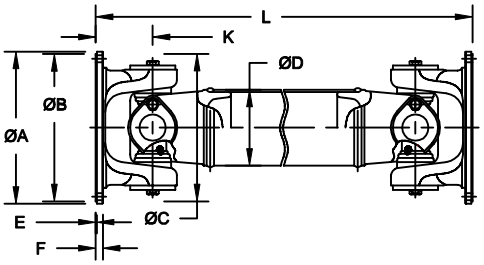

TYPE: FS - FIXED LENGTH SHAFT
SIZES: 61-88

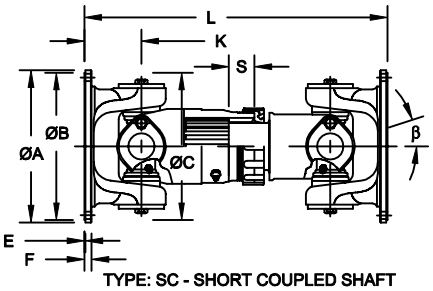

TYPE: SC - SHORT COUPLED SHAFT
SIZES: 61-88

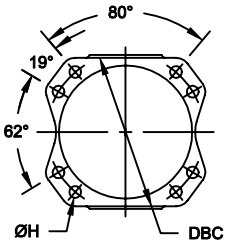

SIZE: 88

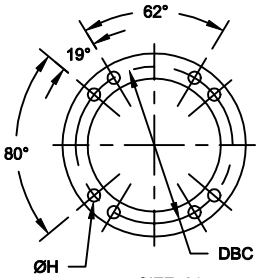

SIZE: 91

Series	61		71		81		88		91	
Torque Ratings										
	in-lb	**Nm**	**in-lb**	**Nm**	**in-lb**	**Nm**	**in-lb**	**Nm**	**in-lb**	**Nm**
Tc	24,000	2,712	36,000	4,068	45,600	5,153	60,000	6,780	93,600	10,576
Ts	43,800	4,949	57,600	6,508	78,000	8,814	106,800	12,068	168,150	19,000
Tp	78,000	8,814	96,000	10,847	144,000	16,271	192,000	21,695	204,000	23,051
Dimensional Data (inches and millimeters except where noted)										
β	26°		22°		30°		22°		24°	
β (SC)	8°		8°		12°		8°		24°	
	in	**mm**	**in**	**mm**	**in**	**mm**	**in**	**mm**	**in**	**mm**
A	6.88	174.8	8.00	203.2	8.00	203.2	9.63	244.6	8.86	225.0
B	3.00	76.2	3.00	76.2	3.00	76.2	3.00	76.2	5.51	140.0
C	7.00	177.8	7.75	196.9	9.13	231.9	8.63	219.2	8.03	204.0
D[1]	3.50	88.9	4.00	101.6	4.50	114.3	4.50	114.3	5.50	139.7
E	0.06	1.5	0.06	1.5	0.06	1.5	0.09	2.3	0.09	2.3
F	0.38	9.7	0.38	9.7	0.38	9.7	0.63	16.0	0.59	15.0
K	2.75	69.9	3.00	76.2	3.38	85.9	3.50	88.9	4.33	110.0
K (SC)	1.88	47.8	2.00	50.8	2.59	65.8	2.50	63.5	4.33	110.0
DBC	6.13	155.7	7.25	184.2	7.25	184.2	8.25	209.6	8.25	209.6
Bolt Qty.	8	8	8	8	12	12	8	8	8	8
H	0.38	9.7	0.38	9.7	0.44	11.2	0.63	16.0	0.63	16.0
Length L[2] / Length Compensation S										
	in	**mm**	**in**	**mm**	**in**	**mm**	**in**	**mm**	**in**	**mm**
ST L	20.35	516.9	23.44	595.4	24.80	629.9	24.81	630.2	27.56	700.0
S	4.88	124.0	3.88	98.6	3.38	85.9	3.50	88.9	2.95	74.9
FS L	13.81	350.8	14.37	365.0	16.30	414.0	19.31	490.5	21.43	544.3
SC L	9.12	231.6	10.62	269.7	13.40	340.4	13.62	345.9	21.46	545.1
S	0.75	19.1	0.75	19.1	1.12	28.4	1.00	25.4	1.58	40.1

1) Special tube diameters available upon request
2) L is minimum for ST and FS design
Longer/shorter length compensation available upon request.
Popular flange yoke configurations shown, special designs available upon request

Engineering Data
Metric Series Sizes 58-120

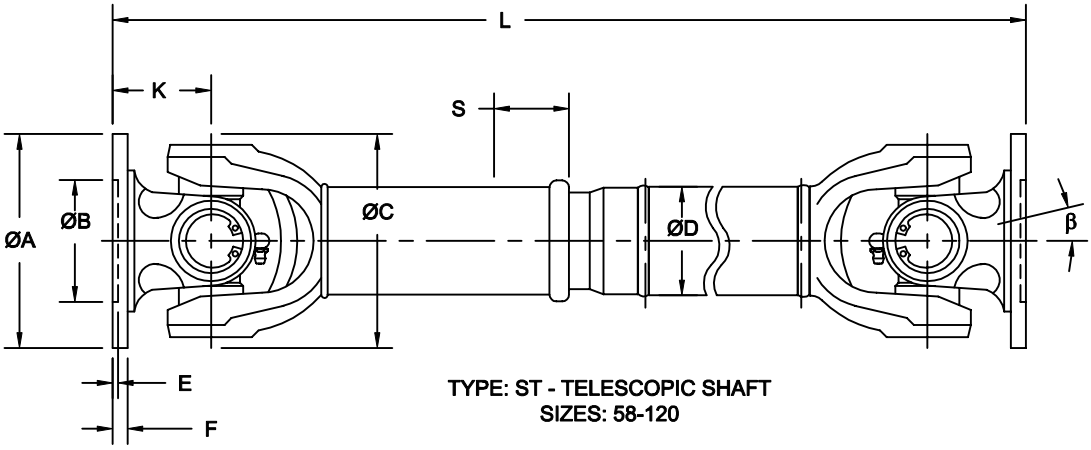

TYPE: ST - TELESCOPIC SHAFT
SIZES: 58-120

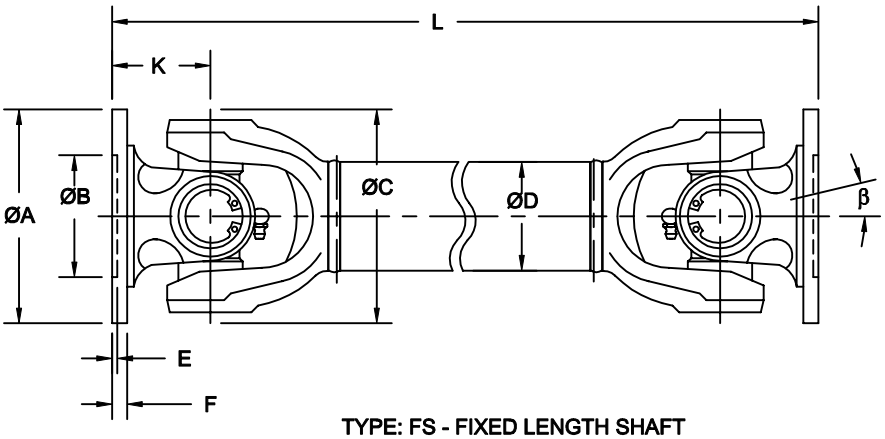

TYPE: FS - FIXED LENGTH SHAFT
SIZES: 58-120

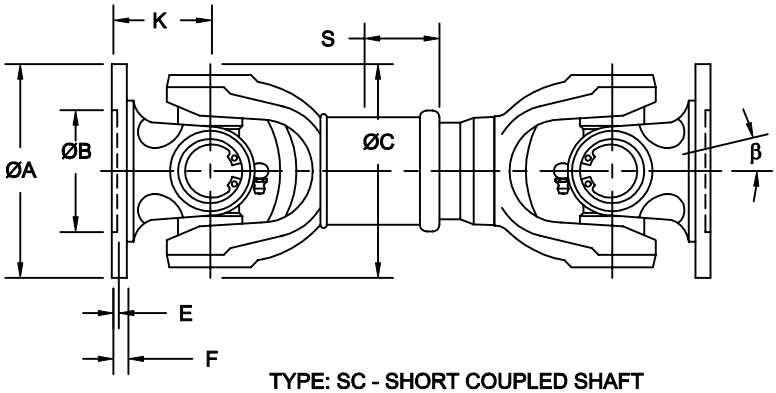

TYPE: SC - SHORT COUPLED SHAFT
SIZES: 58-120

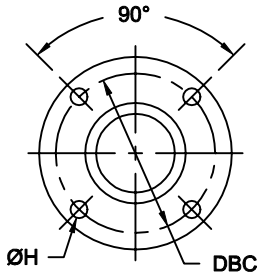

4 BOLT FLANGE DESIGN

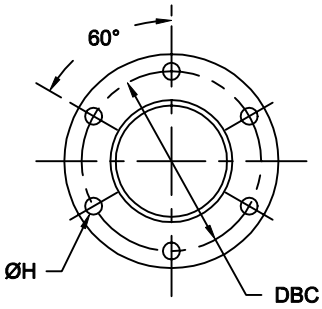

6 BOLT FLANGE DESIGN

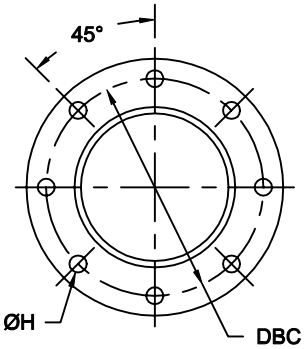

8 BOLT FLANGE DESIGN

Series	58		65		75	
Torque Ratings						
	in-lb	**Nm**	**in-lb**	**Nm**	**in-lb**	**Nm**
Tc	1,319	149	2,053	232	3,478	393
Te	1,037	117	1,382	156	2,852	322
Ts	1,320	149	2,210	250	4,425	500
Tp	3,540	400	5,810	656	10,860	1,227

Dimensional Data (inches and millimeters except where noted)												
	in	**mm**	**in**	**mm**	**in**	**mm**	**in**	**mm**	**in**	**mm**	**in**	**mm**
β	30°		25°		30°		20°		30°		18°	
A	2.28	58	2.56	65	2.56	65	2.95	75	2.95	75	3.54	90
B	1.18	30	1.38	35	1.38	35	1.65	42	1.65	42	1.85	47
C	2.05	52	2.05	52	2.36	60	2.36	60	2.76	70	2.76	70
D[1)]	1.12	28	1.12	28	1.25	32	1.25	32	1.56	40	1.56	40
E	0.06	1.5	0.07	1.7	0.07	1.7	0.08	2	0.10	2.5	0.10	2.5
F	0.14	3.5	0.16	4	0.16	4	0.22	5.5	0.24	6	0.24	6
K	1.18	30	1.18	30	1.26	32	1.26	32	1.42	36	1.42	36
DBC	1.85	47	2.05	52	2.05	52	2.44	62	2.44	62	2.93	74.5
Bolt Qty.	4	4	4	4	4	4	6	6	6	6	4	4
H	0.20	5	0.24	6	0.24	6	0.24	6	0.24	6	0.31	8

Length L[2)] / Length Compensation S						
	in	**mm**	**in**	**mm**	**in**	**mm**
ST L/S	10.55 / 1.57	268 /40	11.42 / 2.36	290 / 60	12.01 / 1.38	305 / 35
FS L	6.30	160	6.50	165	7.87	200
SC L/S	6.50 / .79	165 / 20	7.09 / .79	180 / 20	7.87 / .98	200 / 25
SC L/S	6.89 / .98	175 / 25	7.87 / 1.18	200 / 30	8.86 / 1.38	225 / 35
SC L/S	7.68 / .98	195 / 25	8.86 / 1.18	220 / 30	9.84 / 1.38	250 / 35
SC L/S	8.46 / .98	215 / 25	9.25 / 1.18	235 / 30	10.63 / 1.38	270 / 35

Series	90		100		120	
Torque Ratings						
	in-lb	**Nm**	**in-lb**	**Nm**	**in-lb**	**Nm**
Tc	5,682	642	9,080	1,026	16,381	1,851
Te	4,593	519	6,483	733	11,543	1,304
Ts	7,080	800	11,505	1,300	22,128	2,500
Tp	15,840	1,790	21,060	2,380	36,050	4,073

Dimensional Data (inches and millimeters except where noted)												
	in	**mm**	**in**	**mm**	**in**	**mm**	**in**	**mm**	**in**	**mm**	**in**	**mm**
β	20°		18°		20°		18°		20°		18°	
A	3.54	90	3.94	100	3.94	100	4.72	120	4.72	120	5.91	150
B	1.85	47	2.24	57	2.24	57	2.95	75	2.95	75	3.54	90
C	3.39	86	3.39	86	3.89	98	3.89	98	4.53	115	4.53	115
D[1)]	2.00	50	2.00	50	2.00	50	2.00	50	2.35	60	2.35	60
E	0.10	2.5	0.10	2.5	0.10	2.5	0.10	2.5	0.10	2.5	0.12	3
F	0.24	6	0.28	7	0.28	7	0.31	8	0.31	8	0.35	9
K	1.65	42	1.65	42	1.81	46	1.81	46	2.36	60	2.36	60
DBC	2.93	74.5	3.31	84	3.31	84	4.00	101.5	4.00	101.5	5.12	130
Bolt Qty.	4	4	6	6	6	6	8	8	8	8	8	8
H	0.31	8	0.31	8	0.31	8	0.31	8	0.31	8	0.39	10

Mininum Length L[2)] / Length Compensation S						
	in	**mm**	**in**	**mm**	**in**	**mm**
ST L/S	13.70 / 1.57	348 / 40	14.72 / 1.57	374 / 40	18.52 / 1.57	473 / 40
FS L	8.50	216	9.84	250	11.85	301
SC L/S	8.86 / .98	225 / 25	10.04 / 1.18	255 / 30	12.80 / 1.38	325 / 35
SC L/S	9.84 / 1.57	250 / 40	11.02 / 1.57	280 / 40	14.17 / 1.97	360 / 50
SC L/S	11.02 / 1.57	280 / 40	12.20 / 1.57	310 / 40	15.75 / 2.36	400 / 60
SC L/S	12.20 / 1.57	310 / 40	13.38 / 1.57	340 / 40	16.93 / 2.36	430 / 60

1) Special tube diameters available upon request
2) L is minimum for ST and FS design
Longer/shorter length compensation available upon request.
Popular flange yoke configurations shown, special designs available upon request

Engineering Data
Metric Series Sizes 120HD - 225

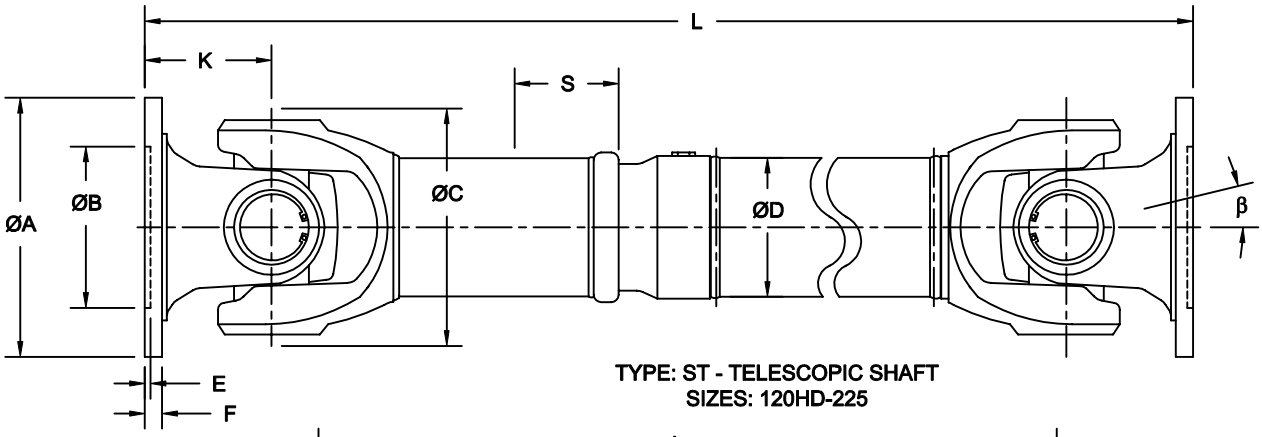

TYPE: ST - TELESCOPIC SHAFT
SIZES: 120HD-225

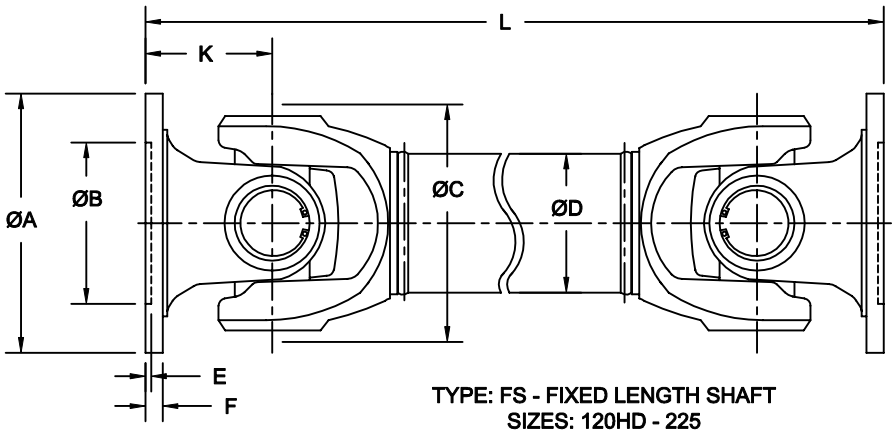

TYPE: FS - FIXED LENGTH SHAFT
SIZES: 120HD - 225

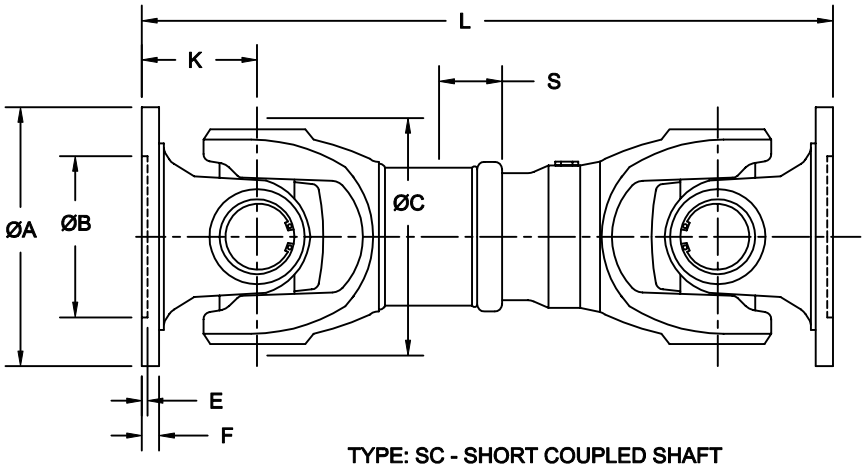

TYPE: SC - SHORT COUPLED SHAFT
SIZES: 120HD - 225

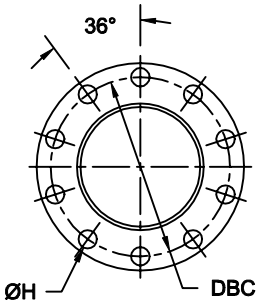

10 BOLT FLANGE DESIGN

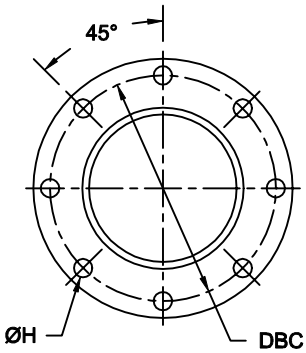

8 BOLT FLANGE DESIGN

Series	120HD		150LD		150	
Torque Ratings						
	in-lb	Nm	in-lb	Nm	in-lb	Nm
Tc	22,037	2,490	30,842	3,485	40,462	4,572
Te	16,880	1,907	22,814	2,578	29,366	3,318
Ts	33,630	3,800	46,020	5,200	61,950	7,000
Tp	47,790	5,400	59,220	6,692	106,200	12,000

Dimensional Data (inches and millimeters except where noted)

	in	mm	in	mm	in	mm	in	mm	in	mm	in	mm
b	20°		20°		20°		20°		20°		20°	
A	4.72	120	5.91	150	5.91	150	7.09	180	5.91	150	7.09	180
B	2.95	75	3.54	90	3.54	90	4.33	110	3.54	90	4.33	110
C	4.92	125	4.92	125	5.83	148	5.83	148	5.91	150	5.91	150
D[1]	2.75	70	2.75	70	3.12	80	3.12	80	3.50	90	3.50	90
E	0.10	2.5	0.12	3	0.12	3	0.14	3.6	0.12	3	0.14	3.6
F	0.35	9	0.35	9	0.35	9	0.39	10	0.47	12	0.47	12
K	2.36	60	2.36	60	2.56	65	2.56	65	2.95	75	2.95	75
DBC	4.00	101.5	5.12	130	5.12	130	6.12	155.5	5.12	130	6.12	155.5
Bolt Qty.	8	8	8	8	8	8	8	8	8	8	8	8
H	0.39	10	0.39	10	0.39	10	0.47	12	0.47	12	0.55	14

Mininum Length L[2] / Length Compensation S

	in	mm	in	mm	in	mm
ST L/S	19.33 / 2.36	491 / 60	21.65 / 4.33	550 / 110	29.21 / 4.33	742 / 110
SF L	12.09	307	13.58	345	17.91	455
SC L/S	13.58 / 1.38	345 / 35	14.17 / 1.57	360 / 40	15.75 / 1.97	400 / 50
SC L/S	14.76 / 1.97	375 / 50	15.75 / 3.15	400 / 80	18.31 / 3.15	465 / 80
SC L/S	16.54 / 2.36	420 / 60	18.11 / 3.15	460 / 80	21.46 / 1.57 [3]	545 / 40 [3]
SC L/S	17.72 / 2.36	450 / 60	--	--	23.03 / 3.15 [3]	585 / 80 [3]
SC L/S	--	--	--	--	25.20 / 4.33 [3]	640 / 110 [3]

Series	150HD		180		225	
Torque Ratings						
	in-lb	Nm	in-lb	Nm	in-lb	Nm
Tc	51,596	5,830	71,614	8,092	124,100	14,023
Te	44,559	5,035	63,811	7,210	133,100	15,040
Ts	88,500	10,000	132,750	15,000	168,150	19,000
Tp	147,795	16,700	198,770	22,460	231,250	26,130

Dimensional Data (inches and millimeters except where noted)

	in	mm	in	mm	in	mm	in	mm	in	mm	in	mm
b	30°		30°		30°		30°		30°		25°	
A	6.50	165	7.09	180	7.09	180	8.86	225	8.86	225	9.84	250
B	3.74	95	4.33	110	4.33	110	5.51	140	5.51	140	5.51	140
C	6.22	158	6.22	158	7.00	178	7.00	178	8.03	204	8.03	204
D[1]	4.00	100	4.00	100	4.38	110	4.38	110	5.50	140	5.50	140
E	0.14	3.6	0.14	3.6	0.14	3.6	0.20	5	0.20	5	0.24	6
F	0.47	12	0.47	12	0.55	14	0.59	15	0.59	15	0.71	18
K	3.39	86	3.39	86	3.78	96	3.78	96	4.33	110	4.33	110
DBC	5.51	140	6.12	155.5	6.12	155.5	7.72	196	7.72	196	8.58	218
Bolt Qty.	8	8	8	8	10	10	8	8	8	8	8	8
H	0.63	16	0.63	16	0.63	16	0.63	16	0.63	16	0.71	18

Mininum Length L[2] / Length Compensation S

	in	mm	in	mm	in	mm
ST L/S	25.98 / 4.33	660 / 110	29.13 / 4.33	740 / 110	32.68 / 4.33	830 / 110
SF L	16.93	430	18.31	465.00	20.47	520.00
SC L/S	15.75 / 1.77 [3]	400 / 45 [3]	18.50 / 1.77 [3]	470 / 45 [3]	21.65 / 1.57 [3]	550 / 40 [3]
SC L/S	17.32 / 3.15 [3]	440 / 80 [3]	19.69 / 2.36 [3]	500 / 60 [3]	23.62 / 2.17 [3]	600 / 55 [3]
SC L/S	19.49 / 1.77	495 / 45	22.05 / 1.77	560 / 45	25.56 / 4.33	650 / 110
SC L/S	21.85 / 3.15	555 / 80	23.62 / 2.36	600 / 60	28.35 / 4.33	720 / 110
SC L/S	23.62 / 4.33	600 / 110	25.59 / 4.33	650 / 110	--	--

1) Special tube diameters available upon request
2) L is minimum for ST and FS design
3) Special yokes required, please consult factory.
Longer/shorter length compensation available upon request.
Popular flange yoke configurations shown, special designs available upon request

Engineering Data
Metric Series Sizes 250 - 435

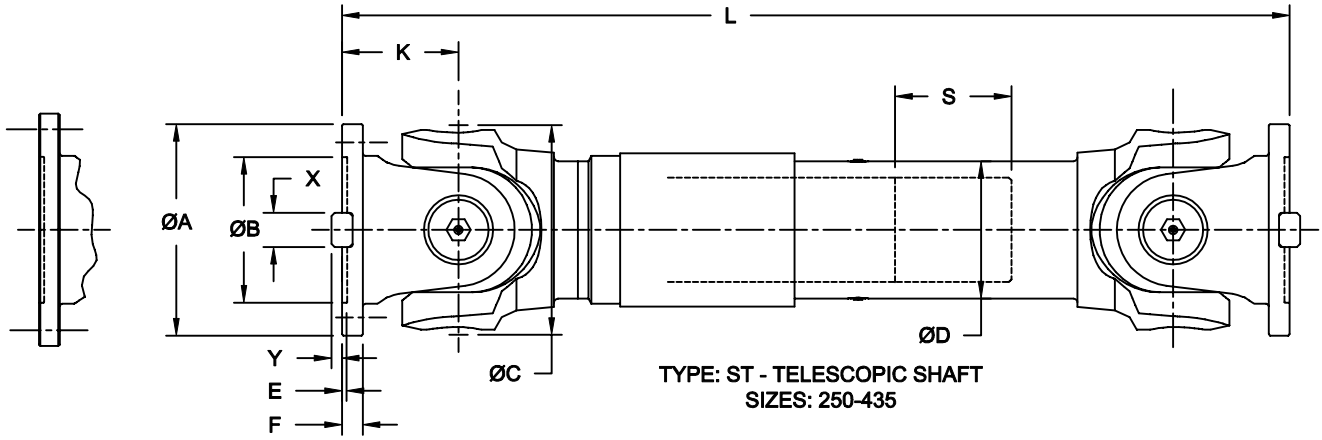

TYPE: ST - TELESCOPIC SHAFT
SIZES: 250-435

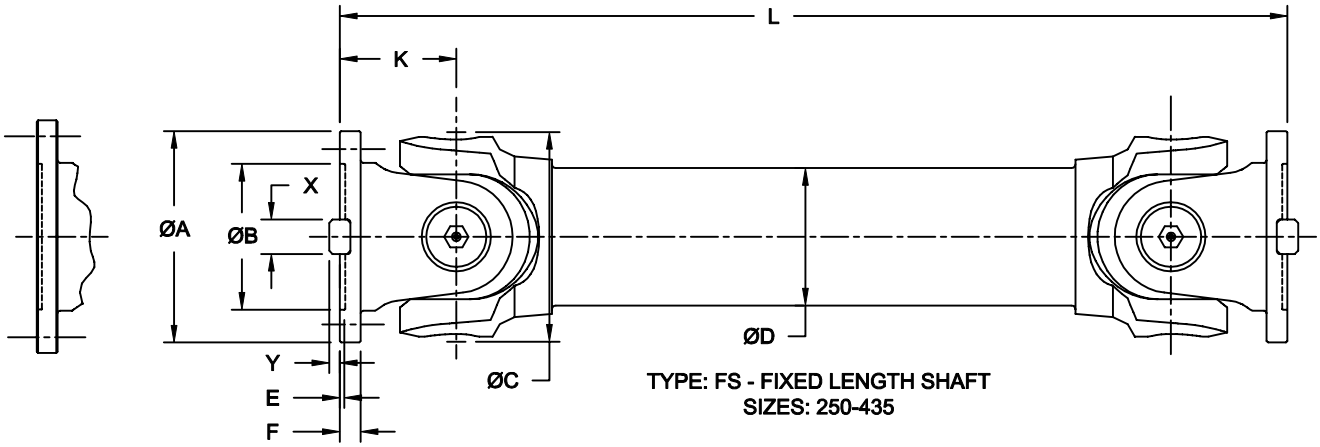

TYPE: FS - FIXED LENGTH SHAFT
SIZES: 250-435

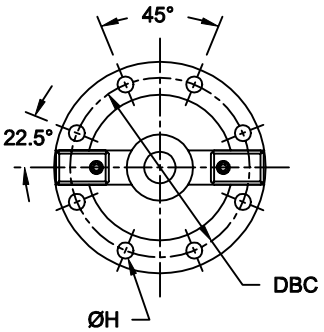

8 BOLT FLANGE DESIGN
WITH FACE KEY

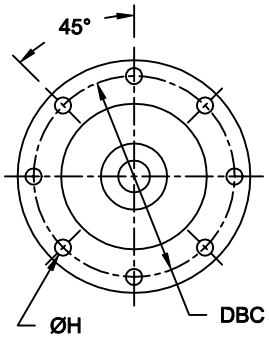

8 BOLT FLANGE DESIGN

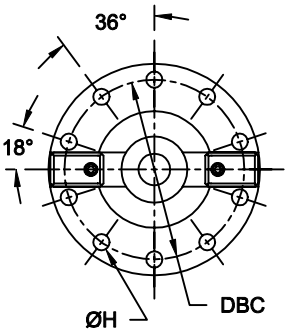

10 BOLT FLANGE DESIGN
WITH FACE KEY

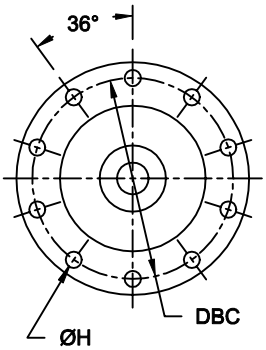

10 BOLT FLANGE DESIGN

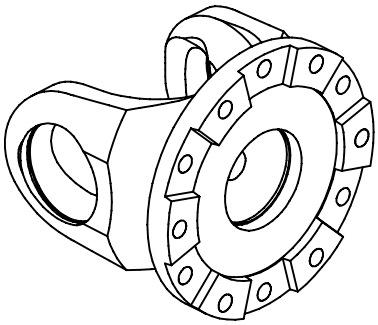

OPTIONAL FACE PAD DESIGN

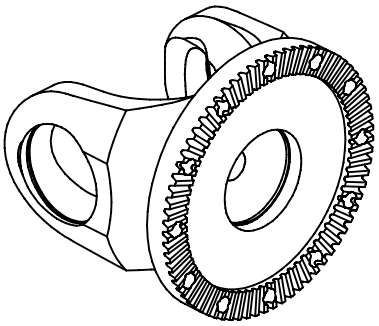

OPTIONAL HIRTH RADIAL TOOTH DESIGN

Series	250				285				315			
Torque Ratings												
	in-lb		Nm		in-lb		Nm		in-lb		Nm	
Tc	170,800		19,299		248,100		28,034		364,400		41,175	
Te	233,800		26,418		265,400		29,989		414,200		46,802	
Tp	464,800		52,520		538,000		60,791		862,000		97,401	
Dimensional Data (inches and millimeters except where noted)												
	in	mm	in	mm	in	mm	in	mm	in	mm	in	mm
b	15°		15°		15°		15°		15°		15°	
A	8.86	225	9.84	250	9.84	250	11.22	285	11.22	285	12.40	315
B	4.13	105	5.51	140	5.51	140	6.89	175	4.92	125	6.89	175
C	8.86	225	8.86	225	9.84	250	9.84	250	11.22	285	11.22	285
D[1)]	6.00	152	6.00	152	6.50	165	6.50	165	7.50	191	7.50	191
E	0.20	5	0.24	6	0.24	6	0.28	7	0.28	7	0.28	7.0
F	0.63	16	0.71	18	0.79	20	0.87	22	1.06	27	1.06	27
K	4.92	125	4.92	125	5.12	130	5.12	130	6.30	160	6.30	160
DBC	7.72	196	8.58	218	8.58	218	9.65	245	9.65	245	11.02	280.0
Bolt Qty.	0.31	8	0.31	8	0.31	8	0.31	8	0.31	8	0.31	8
H	0.63	16	0.71	18	0.71	18	0.79	20	0.83	21	0.87	22
X	1.26	32	--	--	1.57	40	--	--	1.57	40	--	--
Y	0.35	9	--	--	0.49	13	--	--	0.59	15	--	--
Mininum Length L[2)] / Length Compensation S												
	in		**mm**		**in**		**mm**		**in**		**mm**	
ST L	36.42		925		36.81		935		46.85		1190	
S	5.51		140		5.51		140		57.87		1470	
FS L	22.44		570		24.61		625		28.35		720	

Series	350				390				435			
Torque Ratings												
	in-lb		Nm		in-lb		Nm		in-lb		Nm	
Tc	507,400		57,333		733,800		82,915		989,500		111,808	
Te	661,600		74,757		979,500		110,678		1,400,000		158,192	
Tp	1,348,000		152,316		2,067,000		233,559		2,750,000		310,734	
Dimensional Data (inches and millimeters except where noted)												
	in	mm	in	mm	in	mm	in	mm	in	mm	in	mm
b	15°		15°		15°		15°		15°		15°	
A	12.40	315	13.78	350	13.78	350	15.35	390	15.35	390	17.13	435
B	5.12	130	0.87	22	6.10	155	9.84	250	6.69	170	11.02	280
C	12.40	315	12.40	315	13.78	350	13.78	350	15.35	390	15.35	390
D[1)]	8.75	222	8.75	222	10.00	254	10.00	254	10.50	267	10.50	267
E	0.31	8	0.31	8	0.31	8	0.31	8	0.31	8	0.39	10.0
F	1.26	32	0.98	25	1.38	35	1.26	32	1.57	40	1.57	40
K	7.09	180	7.09	180	7.24	184	7.24	184	8.46	215	8.46	215
DBC	11.02	280	12.20	310	12.20	310	13.58	345	13.58	345	15.16	385.0
Bolt Qty.	0.39	10	0.39	10	0.39	10	0.39	10	0.39	10	0.39	10
H	0.91	23	0.87	22	0.91	23	0.94	24	0.98	25	1.06	27
X	1.57	40	--	--	1.97	50	--	--	2.76	70	--	--
Y	0.59	15	--	--	0.63	16	--	--	0.71	18	--	--
Mininum Length L[2)] / Length Compensation S												
	in		**mm**		**in**		**mm**		**in**		**mm**	
ST L	51.77		1315		55.51		1410		62.60		1590	
S	5.51		140		5.91		150		6.69		170	
FS L	31.69		805		33.66		855		37.60		955	

1) Special tube diameters available upon request
2) L is minimum for ST and FS design
Longer/shorter length compensation available upon request.
Popular flange yoke configurations shown, special designs available upon request

Engineering Data
SAE Companion Flanges

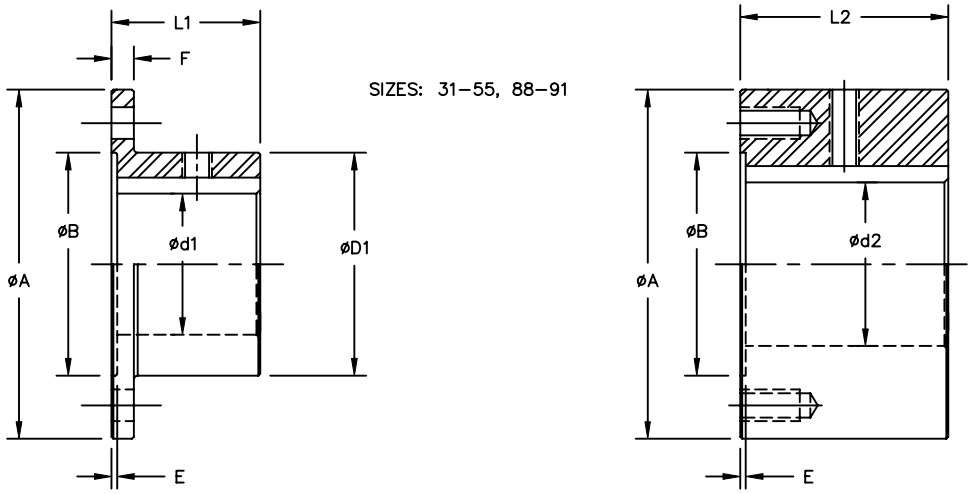

STYLE: SF

STYLE: SLF

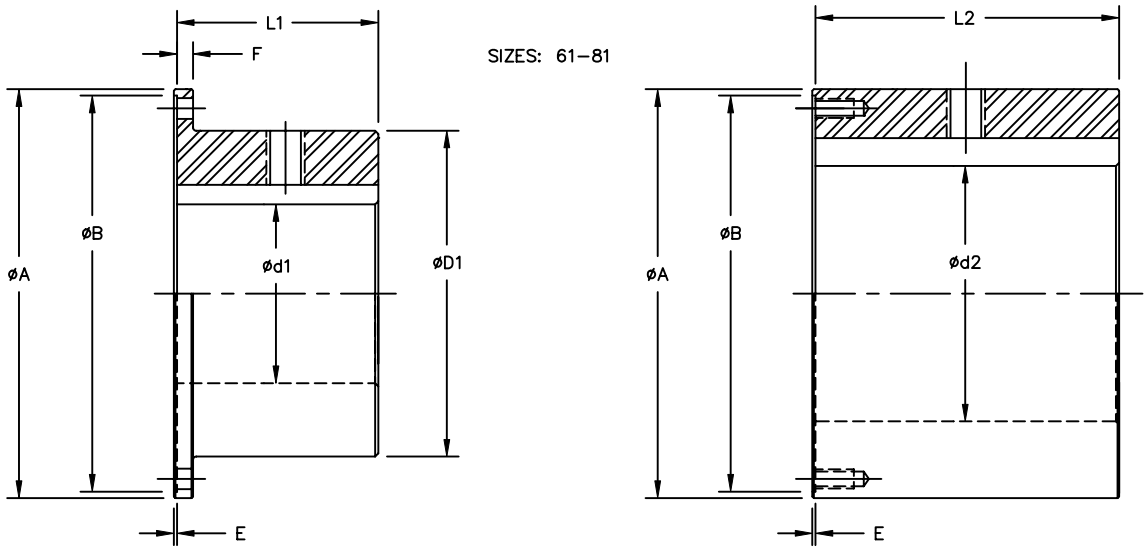

Size	31		37-41		48-55		61		71		81		88-91	
	in	mm	in	mm	in	mm	in	mm	in	mm	in	mm	in	mm
A	3.88	98.6	4.63	117.6	5.88	149.4	6.88	174.8	8.00	203.2	8.00	203.2	9.63	244.6
B	2.38	60.5	2.75	69.9	3.75	95.3	6.62	168.1	7.75	196.9	7.75	196.9	7.00	177.8
E	0.08	2.0	0.08	2.0	0.08	2.0	0.04	1.0	0.04	1.0	0.04	1.0	0.11	2.8
F	0.38	9.7	0.50	12.7	0.38	9.7	0.38	9.7	0.38	9.7	0.50	12.7	0.38	9.7
L1	2.00	50.8	2.00	50.8	2.50	63.5	3.50	88.9	4.00	101.6	4.00	101.6	4.50	114.3
D1	2.44	62.0	2.88	73.2	3.75	95.3	5.25	133.4	6.38	162.1	6.38	162.1	6.88	174.8
d1	1.69	42.9	1.88	47.8	2.44	62.0	3.50	88.9	4.00	101.6	4.00	101.6	4.50	114.3
L2	2.50	63.5	3.00	76.2	3.50	88.9	5.00	127.0	6.00	152.4	6.00	152.4	6.00	152.4
d2	2.38	60.5	2.75	69.9	3.75	95.3	4.75	120.7	5.50	139.7	5.50	139.7	6.50	165.1

Engineering Data
Metric (DIN) Companion Flanges

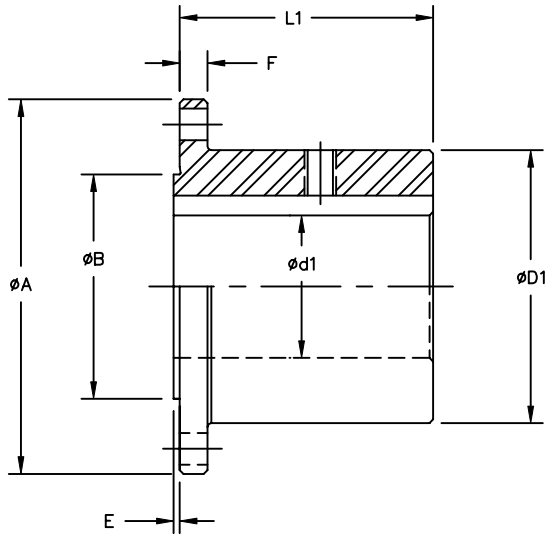

STYLE: SF

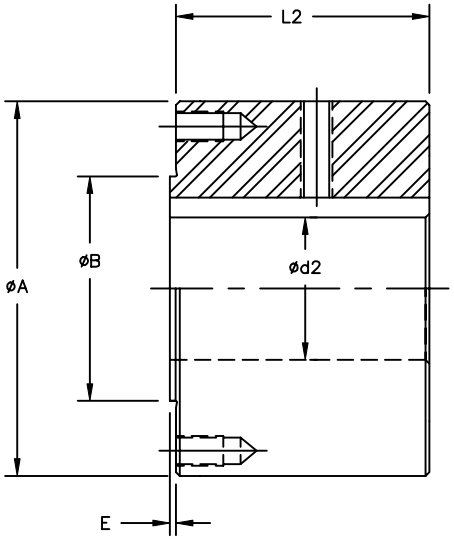

STYLE: SLF

Size	58		65		75		90		100	
	in	mm	in	mm	in	mm	in	mm	in	mm
A	2.28	57.9	2.56	65.0	2.95	74.9	3.54	89.9	3.94	100.1
B	1.18	30.0	1.38	35.1	1.65	41.9	1.85	47.0	3.31	84.1
E	0.054	1.4	0.062	1.6	0.074	1.9	0.094	2.4	0.094	2.4
F	-	-	-	-	-	-	0.25	6.4	0.25	6.4
L1	-	-	-	-	-	-	2.000	50.8	2.000	50.8
D1	-	-	-	-	-	-	2.12	53.8	2.31	58.7
d1	-	-	-	-	-	-	1.25	31.8	1.62	41.1
L2	2.00	50.8	2.00	50.8	2.25	57.2	2.50	63.5	3.00	76.2
d2	1.18	30.0	1.38	35.1	1.65	41.9	1.85	47.0	2.24	56.9

Size	120		150		180		225		250	
	in	mm	in	mm	in	mm	in	mm	in	mm
A	4.73	120.1	5.91	150.1	7.00	177.8	8.86	225.0	9.84	249.9
B	4.00	101.5	5.118	130.0	4.330	110.0	5.512	140.0	5.512	140.0
E	0.094	2.4	0.094	2.4	0.094	2.4	0.157	4.0	0.197	5.0
F	0.38	9.7	0.44	11.2	0.50	12.7	0.63	16.0	0.75	19.1
L1	3.000	76.2	4.000	101.6	4.000	101.6	5.500	139.7	6.000	152.4
D1	3.30	83.8	4.31	109.5	5.19	131.8	6.59	167.4	7.44	189.0
d1	2.25	57.2	2.88	73.2	3.44	87.4	4.44	112.8	4.94	125.5
L2	4.00	101.6	5.00	127.0	4.50	114.3	7.25	184.2	8.25	209.6
d2	2.95	74.9	3.54	89.9	4.13	104.9	5.88	149.4	6.56	166.6

Size	285		315		350		390	
	in	mm	in	mm	in	mm	in	mm
A	11.22	285.0	12.40	315.0	13.78	350.0	15.35	389.9
B	6.890	175.0	6.890	175.0	8.661	220.0	9.843	250.0
E	0.236	6.0	0.236	6.0	0.276	7.0	0.276	7.0
F	0.81	20.6	0.88	22.4	1.00	25.4	1.12	28.4
L1	7.000	177.8	8.000	203.2	9.000	228.6	10.000	254.0
D1	8.41	213.6	9.69	246.1	10.88	276.4	12.09	307.1
d1	5.56	141.2	6.44	163.6	7.25	184.2	8.06	204.7
L2	9.38	238.3	10.25	260.4	11.25	285.8	12.25	311.2
d2	7.50	190.5	8.25	209.6	9.00	228.6	10.00	254.0

Specialty Shafts

Torsionally Dampened Driveshafts

All Power-Transmission Inc. offers torsionally dampened driveshafts designed to reduce the torsional stress between the drive source and the driven unit. Through use of a torsionally dampened driveshaft resonant frequencies are reduced to below the operating speed, and torque spikes caused by resonance can be brought to within permissible levels. Two designs are available, engine flywheel mounted and integral to the drive shaft. Individual design is based on the application requirements. Due to the special nature of this product an application questionaire is provided to facilitate a torsional analysis of the complete drivetrain. Typical applications include dynamometers, boat drives, construction machines et al.

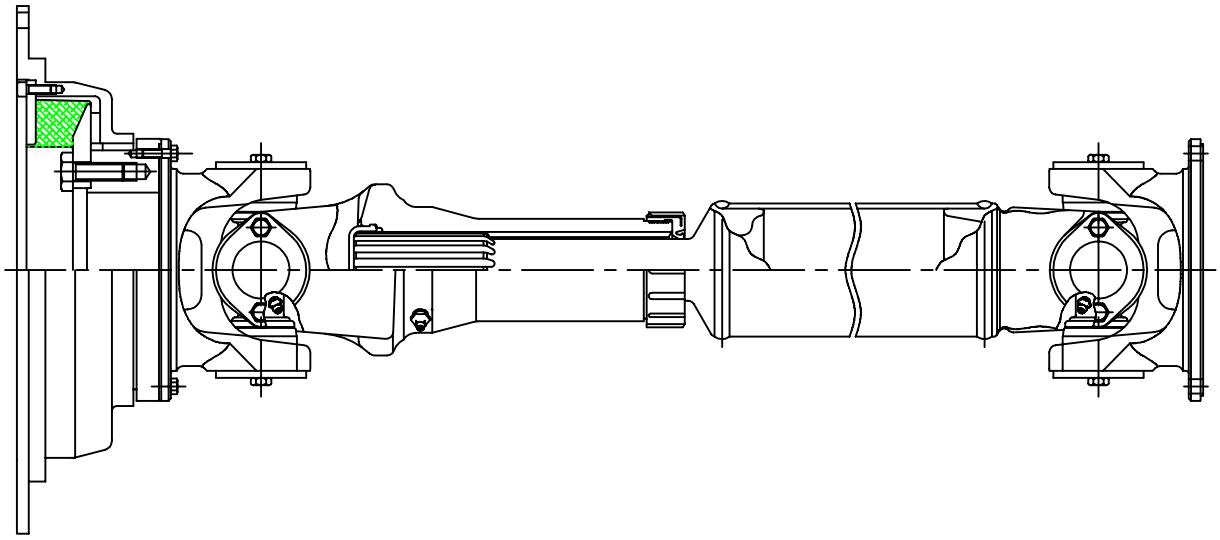

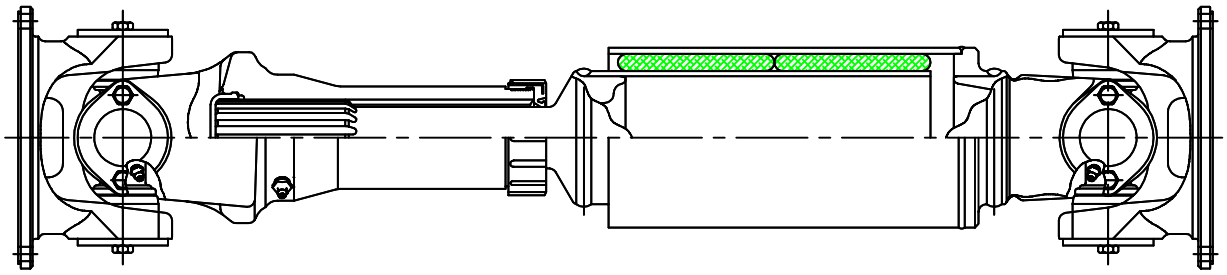

All Power-Transmission, Inc.

General Machinery Application Data for Selection and Design

Customer: _____ Inquiry No.: _____
Contact Name: _____ No. of Units: _____
Type of Mill: _____ Phone: _____
No. of Stands: _____ Fax: _____
Date: _____ No. of Pages _____
(including cover sheet)

Complete the following information for your application.

1. Motor Horsepower _____
2. Motor RMP (Min. and Max.) _____
3. Required Service Factor _____
4. Operating RPM _____
5. Reducer Ratio _____
6. Normal Operating Torque _____
7. Shaft Separation (Min. and Max.) _____
8. Required Shaft Axial Slide _____
9. Operating Angle _____

9a. Operating Offset _____

10. No Load Angle _____

10a. No Load Offset _____

11. Horizontal Application _____

11a. Vertical Application _____

12. Drive End Bore & Keyway _____
13. Driven End Bore & Keyway _____
14. Diameter Limitations _____
15. Desired B-10 Life Hours _____

Comments or special conditions such as: Ambient temperature, atmosphere, etc.: _____

Note: If bolting to existing drive and driven flanges, please specify flange diameter, pilot diameter, bolt circle, number of bolts, and bolt size: _____

Space provided for sketch below.

All Power-Transmission, Inc.

Questionnaire for the Selection of a Torsional Coupling in Connection with a Cardan Shaft

Customer: _____ Inquiry No.: _____
Contact Name: _____ No. of Units: _____
Type of Machine: _____ Phone: _____
Manufacturer: _____ Fax: _____
Date: _____ No. of Pages _____
(including cover sheet)

Complete the following information for your application.

1. Engine
Engine Manufacturer: _____
Type of Engine: _____
Number of Cylinders: _____
Inline ÿ V-engine ÿ V-angle: _____
Power: _____ HP @ n= _____
Maximum Torque _____ in-lb
Size of flywheel/SAE-size: _____

2. Driven Machine
Type of Machine: _____
Manufacturer: _____
Connection size / type: _____
Moment of Inertia in
relation to input shaft: J = _____ lb-ft^2
Comments or special conditions such as: Ambient temperature, atmosphere, etc.:

_____
_____
_____

With fail safe ÿ without fail safe ÿ
Note: If bolting to existing drive and driven flanges, please specify flange diameter, pilot diameter, bolt circle, number of bolts, and bolt size: _____

_____
_____

Space provided for sketch below.