ALL POWER-
TRANSMISSION

Off Highway and Industrial Universal Joints

Capacities from 4,250 to 26,000 lbs.-ft. rated static torque

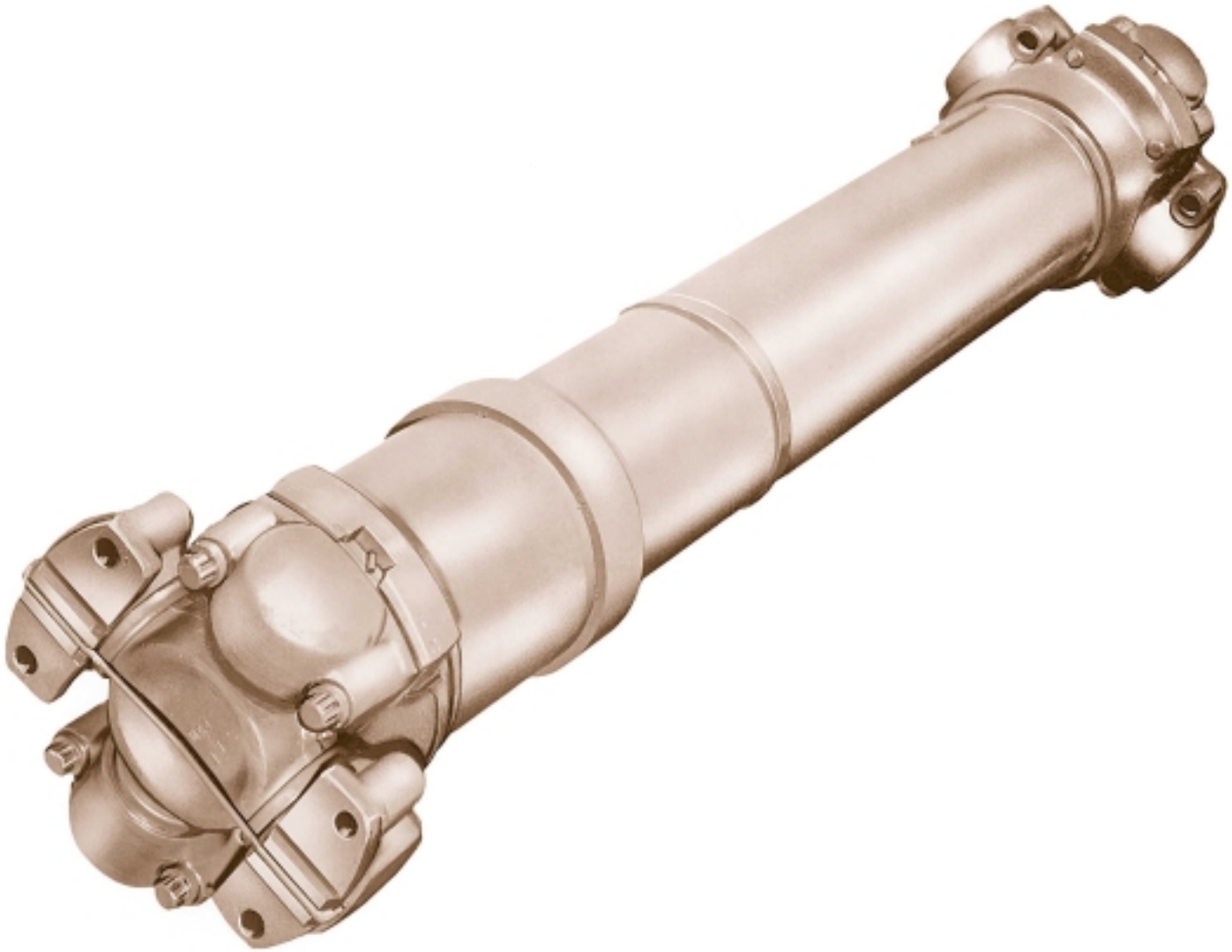

Off-Highway and Industrial Universal Joints

All Power-Transmission Inc. purchased the design, equipment and manufacturing rights to the Twin Disc J-line of universal joints in March 2000. Building on the nearly half century of experience by Twin Disc, All Power is now producing universal joints to the same exacting standards as the original Twin Disc.

Designated as APTD, All Power-Transmission Inc. now has available seven sizes of industrial U-joints J-170, J230, J-310, J-490, J-600, J-800, and J-1200 with different types in each size. These types are described in the following pages of this bulletin. The types vary according to range and method of accommodating axial slip. Capabilities range from 4250 lbs.-ft. to 26,000 lbs.-ft. rated static torque. The static brinell capacity of the roller bearings in the U-joint is approximately twice the rated capacity of the joint. The yield point of the yokes and cross in the U-joint is approximately 2½ times the rated capacity. The yield strength varies with the yoke design.

These APTD Model J Series U-joints in sizes J-170 to J1200 all use high-wing bearing cap design exclusively. High wing construction provides longer capscrews for attaching the bearing caps. These longer capscrews will remain tight under the most severe operating conditions. High-wing bearing caps, together with externally wrenched capscrews permit use of a larger diameter bore in the cap, thus accommodating a larger bearing. This larger bearing assures longer U-joint life for a given swing diameter.

Wing-type bearing cap design also provides a lighter and more serviceable assembly. Since companion flanges are not required as in round bearing types, the centerline of the U-joint is closer to the bearings in both driving and driven machinery. Thus, overhanging loads are minimized.

The sizes J-230, J-310, J-600 and J800 Model U-joints are interchangeable with wing-type U-joints of other manufacturers. APTD U-joints, however, offer greater dynamic ratings than other U-joints of equivalent size. The dynamic factor is a measure of the U-joint's life.

It indicates the ability of the U-joint to transmit a given power through a specified U-joint angle at a certain speed for a specified number of hours.

Since the life of the U-joint is really an expression of the life of the roller bearings, the dynamic factor of the U-joint can be calculated from a formula based on modifications of basic roller bearing formulas. APTD design emphasis in this area has resulted in the adoption of larger diameter accurately guided roller bearings as standard. Larger bearings mean greater life expectancy for a given swing diameter- an important consideration to designers and users who are now experiencing unsatisfactory U-joint performance yet do not have space for a larger size.

In choosing U-joints for any industrial application, bear in mind this fact: APTD is calculates a U-joint lifespan based on four variables- torque, speed, angularity and application factors. For this reason, you can choose a U-joint design to match the predicted lifespan of the other components in your drive system.

This bulletin has been prepared to assist designers in making tentative size selections- however, trained factory Application Engineers are available in Green Bay, Wisconsin, to assist in solving universal joint application problems. Also All Power factory authorized agents and distributors are available to make specific recommendations on U-joint applications. In addition, All Power Engineers are available to make special designs to solve specific applications.

Design Features

Tapered-Shoulder Trunnions- Shoulder is tapered at base of the cross trunnions to reduce bending stresses. This construction also protects the seal from accidental damage during assembly.
Double-Lip Seal- Provides positive protection against grease leakage.
Thrust Bearings- Each cap has a 30% glass filled nylon compound thrust bearing to prevent steel-on-steel contact of trunnions to minimize friction and prevent galling under heavy loads. Glass-filled nylon bearings automatically adjust themselves to compensate for minor deflections.
Accurately-Guided Roller Bearings- A standard and exclusive feature. Cage prevents skewing by holding each roller parallel to the axis of the trunnion. Each roller thus carries its full share of the bearing load. Also, this type bearing retains more grease.
Permanent Grease Feature- Proven successful over years of service in crawler tractor, off-highway trucks and front-end loader applications, All Power now offers this feature to all users. Cross and bearing assemblies are sealed for the normal life of the U-joint drive shaft. This prevents dirt and contamination from entering cross and bearing assemblies through the grease gun from poorly maintained servicing equipment and there is no longer a need a grease in accessible U-joint buried beneath shrouds and guards.

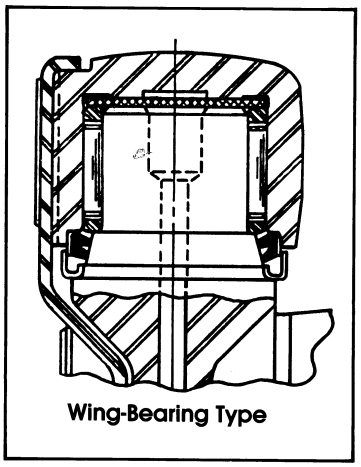
Wing-Bearing Type

Outstanding Design Features:

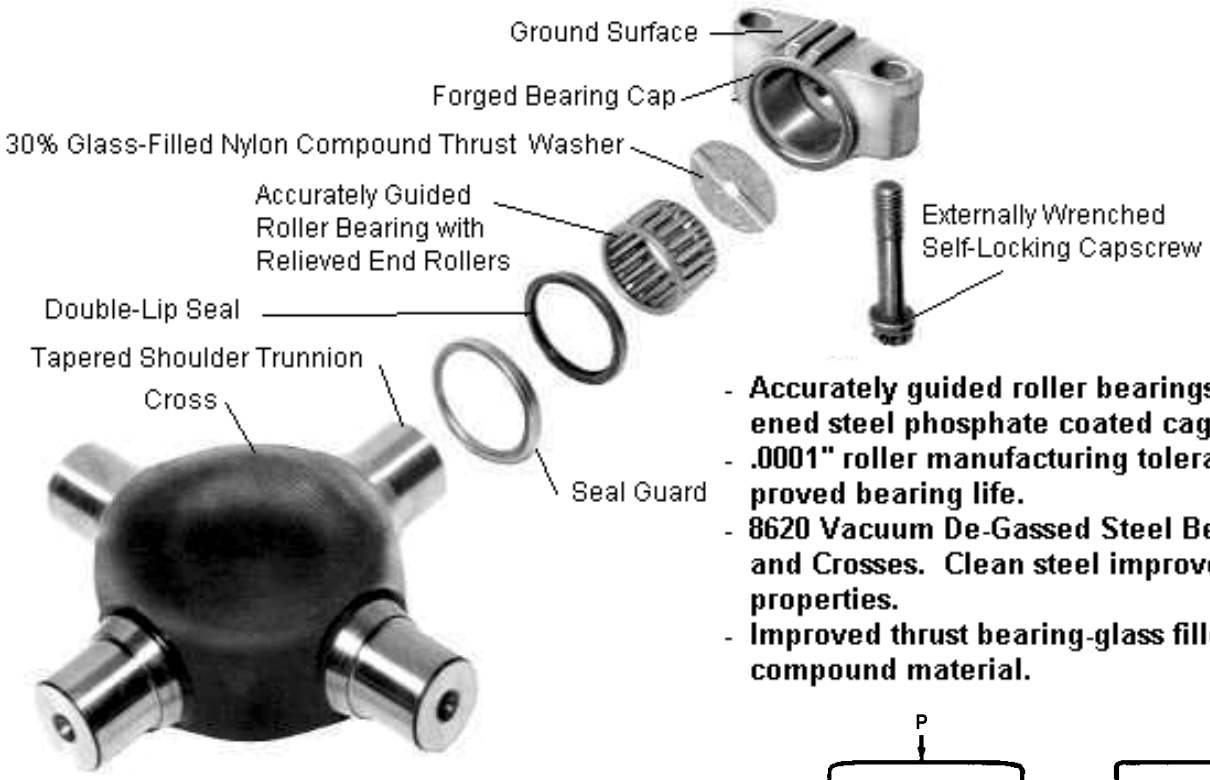

- **Accurately guided roller bearings have hardened steel phosphate coated cages.**
- **.0001" roller manufacturing tolerance for improved bearing life.**
- **8620 Vacuum De-Gassed Steel Bearing Caps and Crosses. Clean steel improves fatigue properties.**
- **Improved thrust bearing-glass filled nylon compound material.**

"Relieved End" Rollers - Rollers are slightly tapered to eliminate stress concentration normally encountered at the ends (see sketch). The more uniform stress patttern thereby gained adds appreciably to bearing life.

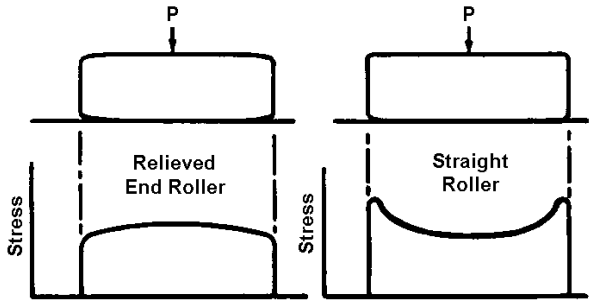

Drive Selection

Continuous torque (Tc) is the bearing life rating of the universal joint. This torque is based on the B-10 life of the universal joint bearings. The life torque values listed are based on 5000 hours B-10 bearing life at 3° misalignment and 100 RPM. B-10 life is defined as the minimum life expectancy for a 90% probability of survival. Typically the average actual operating life of the bearings is 5X the calculated B-10 life.

Static torque (Ts) is the maximum allowable torque based on the yield strength capacity of the joint.

Universal Joint Selection

I. Calculate application torque (Ta)

$$Ta = \frac{HPx5252}{N} x \text{ Service Factor}$$

N = Speed (RPM)

II. Check to see if life is sufficient.

$$Lh = \frac{1.5x10^6}{AxN}\left[\frac{Tc}{Ta}\right]^{\frac{10}{3}}$$

Where:
Lh = B-10 life in hours
A = operating angle in degrees
N = speed (RPM)
Tc = continuous torque
Ta = application torque

III. Duty Cycle: In application where the torque, speed and operating angle vary predictably during a typical load cycle or operational sequence, a duty cycle can be determined. First the load cycle must be analyzed and divided into groups of fixed combinations of torque, speed and operating angle. These groups represent percentages of the total operating time of the load cycle. Life expectancy can then be calculated using Miner's Theory, which takes into account the cumulative effect resulting from operating at varying conditions.

The total life expectancy can be calculated using the following equation:

$$L\ total = \frac{N_1}{L_1} x \frac{N_2}{L_2} x \frac{N_3}{L_3} x ... x \frac{N_m}{L_m}$$

Where:
L total = Total B10 life expectancy
N_1 = fraction of total, time at operating condition 1
L_1 = life expectancy at operating condition 1 (hours)
m = total number of operating conditions

IV. Determine Peak Torque conditions. Ts must exceed the maximum operating torque.

V. Other considerations:
There are many other items that can determine the size of a universal joint. These include:
1. Diameter and length limitations.
2. Bore size.
3. Equipment restrictions on forces and moments.
4. Speed limits
(see charts)
a. due to mass acceleration as a function of misalignment
b. critical speed of center shaft

Telescopic splines are available on TS, TSI and CS designs. Telescopic sections are required for length compensation between two end connections. They will compensate for length changes due to machine articulation, temperature changes, frame flexure …etc.
Splines are provided nylon coated as standard. Special designs are available on request**.**

U-Joint Series	Continuous Rated Torque (lbs.-ft.) (Tc)	Static Rated Torque (lbs.-ft.) (Ts)	Maximum RPM*
J-170	2,750	4,250	4,000
J-230	3,831	6,100	4,000
J-310	5,235	8,400	3,300
J-490	8,152	12,500	3,000
J-600	9,902	15,100	3,000
J-800	13,337	18,000	2,500
J1200	20,005	26,000	2,000

* Maximum operating speed shown subject to length and angle limitations.

Axial Forces

While universal joints do not produce axial forces they will transmit a portion of the axial forces applied to them. The amount of axial force that they can transmitted via the spline section is a function of the spline coefficient of friction, operating torque and the spline pitch diameter per the following formula.

$$F = \frac{2T\mu}{PD}$$

F = Axial Force
T = Operating Torque
μ = Coefficient of Friction
(.05 to .10 for lubricated nylon coated on steel, contact All Power for other conditions)
PD= Spline Pitch Diameter

Maximum RPM

In applications where long shafts and or high speed are combined, the speed is restricted by the lateral critical speed of the center section. This speed is a function of the center tube diameter, wall thickness and the effective length. The maximum operating speed must be less than the lateral critical speed. The maximum operating speed must not exceed 75% of critical speed. For most applications involving universal joints, operation at 1/2 critical speed will also create unacceptable vibration. For shafts longer than shown or where the allowable speeds are exceeded special oversize tubing may be used. Please contact All Power for details.

Balancing

Driveshafts are generally provided straightened and balanced. For some low speed application they are provided straightened only. For high-speed applications and some sensitive applications, special balance requirements may be required. Please contact All Power.

LOAD	DRIVEN EQUIPMENT	CONTINUOUS NON-REVERSING PRIME MOVERS MOTORS TURBINES	REVERSING PRIME MOVERS DC MOTORS RECIPRICATING ENGINES
CONSTANT TORQUE	Generators Centrifugal Pumps Conveyors	1.00	1.50
LIGHT TORQUE	Continuous Casters Light fans Machine Tools Woodworking Equipment Paper Mill equipment Bar & Rod Mills	1.25	2.00
MEDIUM TORQUE	Compressors Pumps, Fans Cold Rolling Mills Presses Agricultural Equipment	1.50	2.25
HEAVY SHOCK	Traction & Locomotive Drives Mixers, Crane Drives Mining Equipment Hot Rolling Mill Drives Runout tables	2.00	3.00
VERY HEAVY SHOCK	Ore Crushers Scale Breakers Feed Roll Drives	3.00	5.00

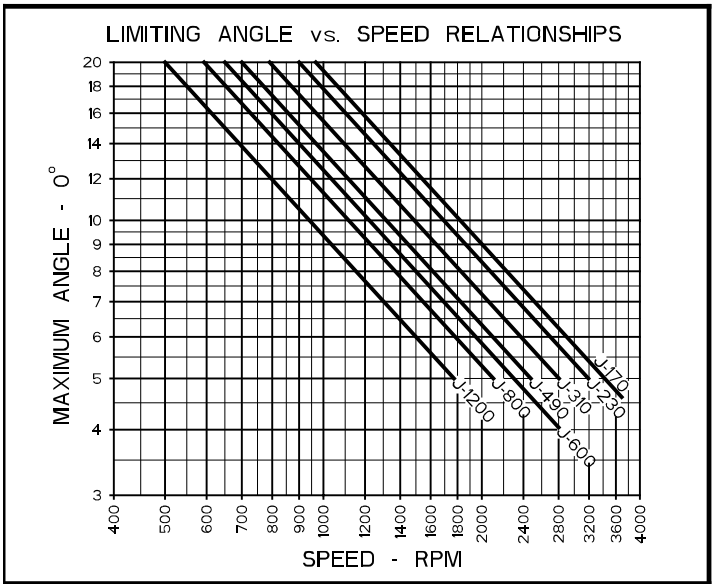

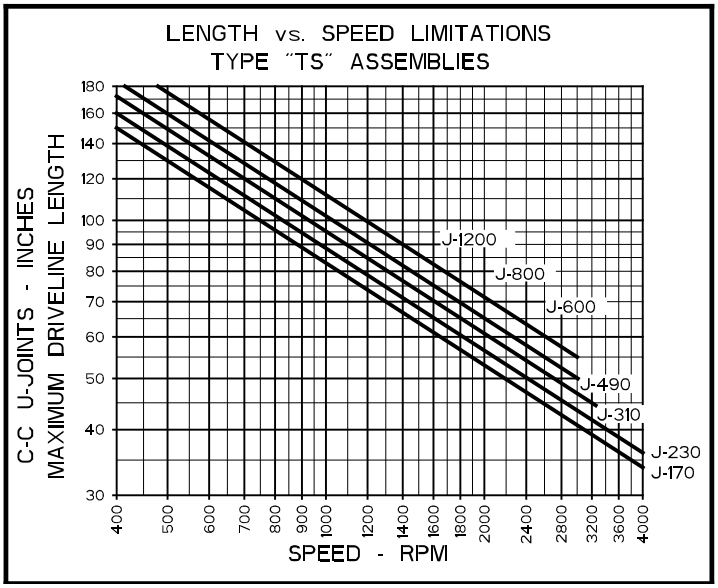

Wing-Bearing Type Double

J-170-TS through J-310-TS

TYPE "TS" with tube and slip
(standard maximum working angle: 20°)

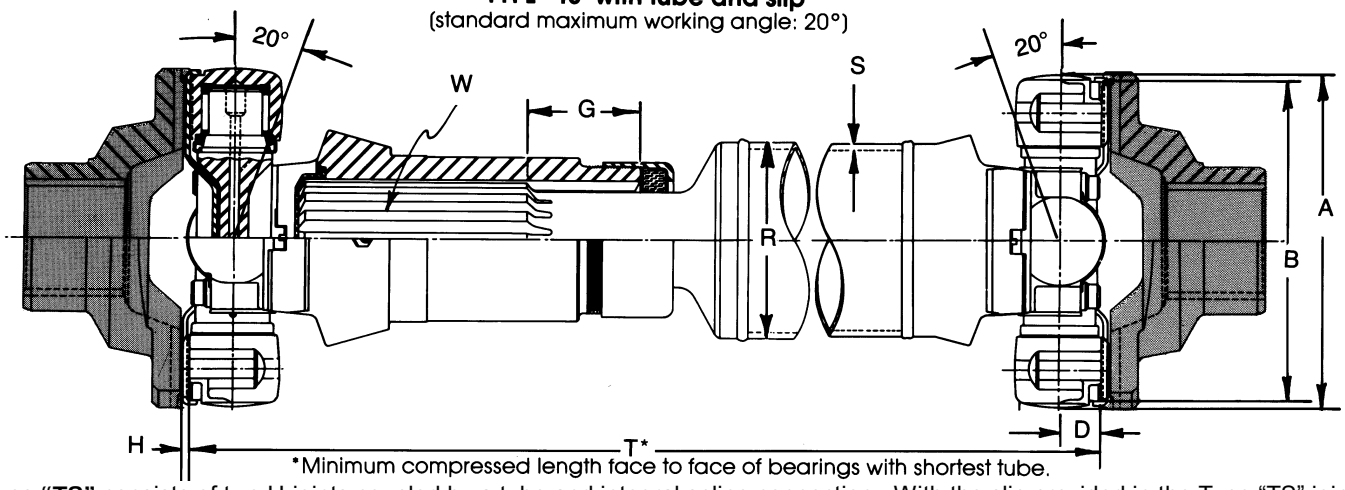

*Minimum compressed length face to face of bearings with shortest tube.

Type "TS" consists of two U-joints coupled by a tube and integral spline connection. With the slip provided in the Type "TS" joint, mating yokes at the ends on the assembly can be axially fixed to the respective machinery components. Primarily designed for vehicles, Type "TS" assemblies are applicable to industrial machinery installations where length is not a limiting factor, such as connecting remotely mounted components. For extremely long drives with critical speed limitations, the Type "TS" can be used with a single U-joints with a tube and center bearing. All slip spline members incorporate a blind tooth to prevent incorrect assembly.

TYPE "CS" with slip and without tube—close-coupled
(standard maximum working angle: 20°)

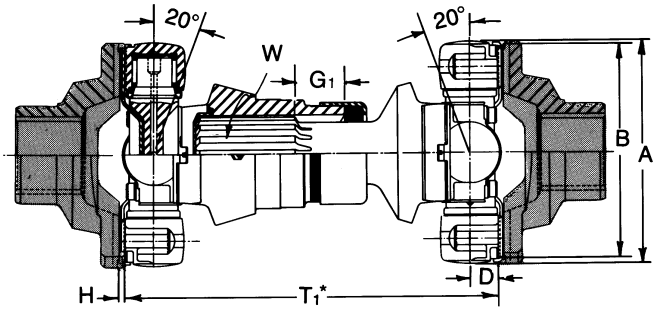

*Compressed length face to face of bearings of typical assembly.

TYPE "T" with tube and without slip
(standard maximum working angle: 20°)

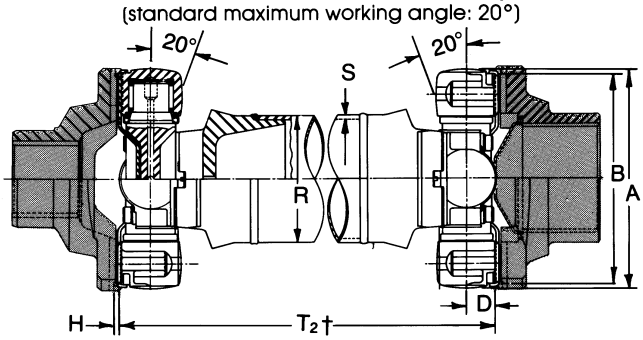

†Fixed length face to face of bearings.
Minimum fixed length face to face of bearings with shortest tube.

Type "CS" consists of two U-joints connected by a slip spline. Slip is provided in the joint assembly so that fitting yokes a the ends of the assembly can be axially fixed to the respective components. One application for the Type "CS is in the center of all-wheel-drive vehicles. With articulated steering. Other applications include industrial machinery where the components ahead of and behind the U-joint assembly are close together.

Type "T" consists of two U-joint assemblies connected by a tubular shaft identical to the Type "TS" except that no slip is provided. Compensating slip must be taken up in one of the yokes at the ends on the assembly.

Joint Size	Assembly Drawing Number					Swing Dia. A	Pilot Dia. B ±.001	Bear-Ing Height D	H
	Type TS	Type CS	Type T	Type CP	Type CP7				
J-170	X-209220	--	X-209221	--	X-209307	6.75	6.375	.92	.20
J-230	X-209055	X-209114	X-209064	X-209147-A	X-209154	6.88	6.500	1.11	.20
J-310	X-218422	X-208998-A	X-218444	X-209005-A	X-209015	8.62	8.250	1.11	.20
J-490	X-229181	X-229606	X-209214	--	X-209483	9.25	8.750	1.34	.34
J-600	X-237365	X-237368	X-229827	--	--	9.25	8.750	1.58	.34
J-800	X-237357	X-237366-A	X-228489	--	X-228717	10.75	10.236	1.50	.44
J-1200	X-237314	X-237317	X-219429	--	--	12.18	11.500	1.78	.44

A Swing Diameter
B Pilot Diameter of Mating part
D Bearing Height
G Slip
H Height of key
J Bolt Hole Spread
A cross bearing
W ings
K Bo It Hole Location from Center Line
L Key Width of
M ating Part
M Bolt Hole Spread Across Yoke
N Bolt Hole Location From Center Line
P Bolt Hole Diameter
Q Bolt Size
R Outside Tube Diameter
S Tube Wall Thickness
T Compressed or Fixed Length Face to Face of Bearings

USE A CERTIFIED PRINT FOR INSTALLATION

Universal Joint Assemblies

TYPE "TSI" with tube and inverted, large diameter slip spline
(standard maximum working angle: 20°, except J-600: 17.5°)

J-490-TSI through J-1200-TSI

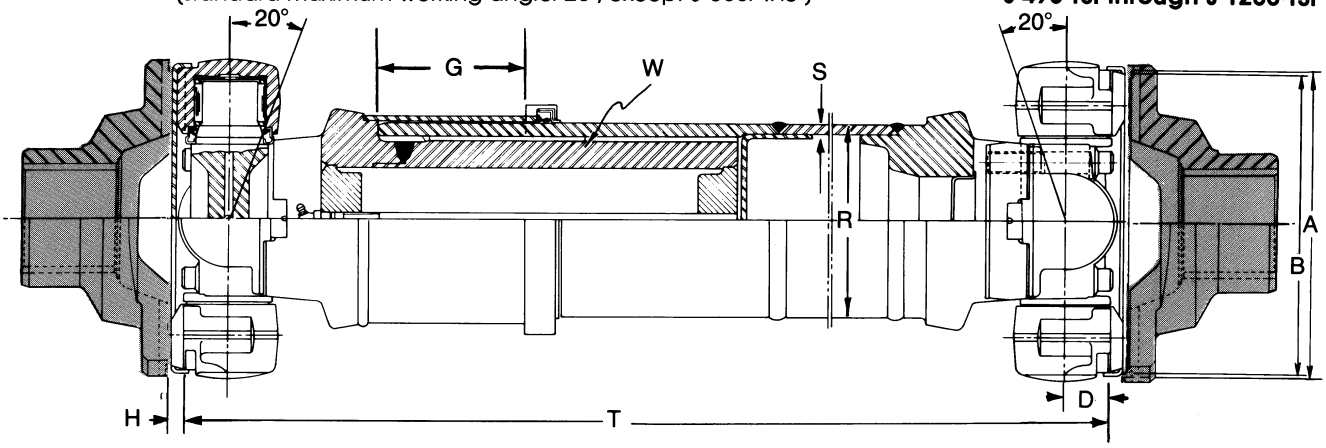

Type "TSI" consists of two cross and bearing assemblies connected by a tube and large diameter spline. The large diameter spline provides less slip resistance under load and a smoother operating shaft at high speeds. Slip members have a blind tooth to prevent incorrect assembly.

TYPE "CP" with coupling plate and without slip—close-coupled (standard maximum working angle: 15°)

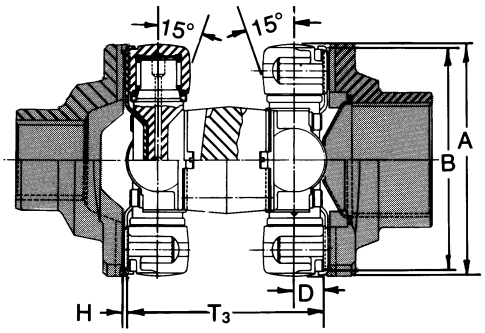

Shortest length face to face of bearings for 15° angle

TYPE "CP7" with coupling plate and without slip—extra-close-coupled (standard maximum working angle: 7°)

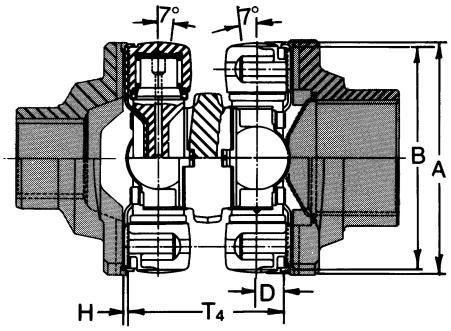

Shortest length face to face of bearings for 7° angle

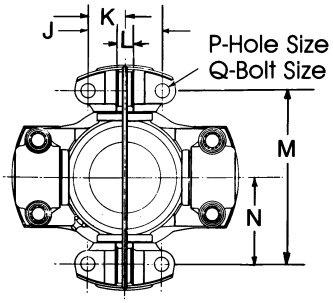

End View for All Types

Type "CP" consists of two cross and bearing assemblies connected by a coupling plate. Compensating slip must be taken up in one of the yokes at the ends of the assembly. Type "CP" is primarily designed for front-wheel-drive installations. If properly applied, this joint will give performance similar to constant velocity joints at substantial cost savings. Type "CP" operates in the open, and requires no grease-tight enclosure. Cross and bearings can be replaced without complete disassembly of the axle. This assembly is also recommended for industrial machinery where space is at a premium.

Type "CP7" is similar in construction to type "CP" but designed to fit in an even shorter space. One application is in vehicle installations for the drive between a toque converter and a midship mounted transmission.

Minimum Compressed or Fixed Length					Slip		Size Slip Spline W	Tube							Bolt Hole P	Bolt Size Q
(TS) T	(CS) T_1	(T) T_2	(Cp) T_3	(CP7) T_4	(TS) G	(CS) G_1		O.D. R	Wall Thick-ness S	J ±.010	K ±.005	L ±.0005	M ±.010	N ±.005		
18.06	--	9.80	--	5.52	3.00	--	2 2/8-16	4.00	.120	2.440	1.220	.6235	4.930	2.465	15/32	7/16-20
21.75	14.44	13.12	6.50	6.00	3.00	2.00	2 2/8-16	4.50	.148	2.812	1.406	.6235	4.874	2.437	17/32	½-20
24.50	12.00	13.12	7.00	6.00	5.00	1.25	3-16	5.00	.220	2.812	1.406	.6235	6.624	3.312	17/32	½-20
25.66	18.62	13.98	--	7.68	5.00	2.75	5-29	5.60	.253	3.500	1.750	.9985	6.800	3.400	21/32	5/8-16
26.04	21.00	12.94	--	--	4.00	2.50	5-29	6.50	.276	3.500	1.750	.9985	6.800	3.400	25/32	¾-16
30.25	23.56	17.31	--	9.67	5.00	4.00	5 43/64-33	6.50	.340	3.936	1.986	1.2485	7.872	3.936	25/32	¾-16
32.37	21.62	20.00	--	--	5.00	1.00	5 43/64-33	6.50	.340	4.640	2.320	1.2485	8.880	4.440	29/32	7/8-14

USE A CERTIFIED PRINT FOR INSTALLATION

Fitting Yokes

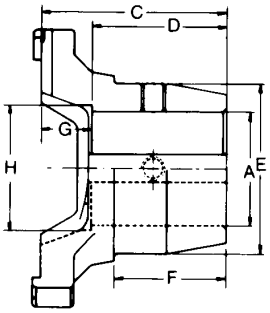

Forged Yoke with Straight Bore and Keyway

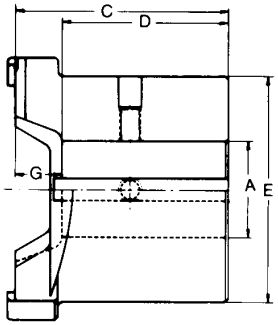

Cast Yoke

F	orged Yoke
	Cast Yoke

Series	Stock-Bore Yoke Number	A C Bore ± .001 Minimum	A C Bore ± .001 Maximum	Length	D Length of Hole	E Hub Diameter	F Hub Length	G Depth of Counter-bore	H Diameter of Counter-bore (Nominal)
J-170	218487 1.	375		4.68	3.43	4.00	2.00	1.25	3.25
	209589	2.751		5.19	4.00	6.00	--	1.19	--
J-230	218470 1.	500		4.75	3.31	4.68	2.50	1.44	3.50
	209194	2.000		5.36	4.00	6.00	--	1.36	--
J-310	227486 1.	500		6.56	4.94	5.10	3.50	1.62	4.00
	227790	3.249		6.56	5.00	7.75	--	1.56	--
J-490	218488 2.	250		6.16	4.54	6.12	3.25	1.62	4.875
	227882	3.875		6.80	5.00	7.75	--	1.80	--
J-600	229512 2.	250		6.16	4.54	6.12	3.25	1.62	4.875
	229513	4.000		6.80	5.00	7.75	--	1.80	--
J-800	228587 2.	875		6.62	4.36		3.25	2.26	--
	228511	3.250		9.00	6.85	9.25	--	2.00	5.00
J-1200	219415 2.	250		8.25	6.00	7.50	5.00	2.25	--
	227883	4.499		10.00	7.85	10.50	--	2.15	--

USE A CERTIFIED PRINT FOR INSTALLATION

Flanged Yokes

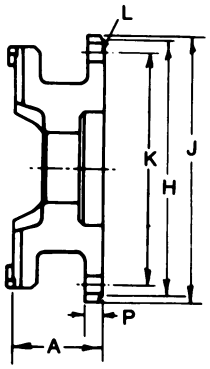

Series	Flange Yoke	A H Overall Length	Flange Pilot	J Flange O.D.	K Bolt Circle	L No. of Holes	L Hole Diameter	P Flange Width
J-170	209560 1.	44	7.747 / 7.749	7.999 / 8.001	7.250 8		.378	.38
	X-219130 2.	62	10.872 / 10.874	10.872 / 10.874	9.750 10		.643	.62
J-230	209420-A 3.	12	7.747 / 7.749	7.999 / 8.001	7.250 12		.440	.44
	X-219028 3.	68	10.872 / 10.874	10.872 / 10.874	9.750 10		.643	.62
J-310	209419-B 3.	12	7.747 / 7.749	7.999 / 8.001	7.250 12		.440	.44
	X-219027 3.	68	10.872 / 10.874	10.872 / 10.874	9.750 10		.643	.62
J-490	X-218625-B 3.	68	10.872 / 10.874	10.872 / 10.874	9.750 10		.643	.62
	X-219196 4.	25	5.5118 / 5.5134	9.831 / 9.833	8.583 8		.781	.70
	228415 2.	25	8.747 / 8.749	10.890 / 10.870	9.750 8		.628	.62
J-600 X	-237285	3.38	10.999 / 11.001	10.999 / 11.001	9.750 10		.656	.75
J-800 X	-228500	5.15	6.8897 / 6.8913	11.230 / 11.210	9.645 8		.781	.79
J-1200	X-219169 6.	00	14.995 / 14.998	14.995 / 14.998	12.500 10		1.010	.87
	X-219169-F 6.	29	6.8897 / 6.8913	12.420 / 12.380	11.024 8		.906	1.17